MUTOH

ValueJet

VJ-1938TX

Operation Manual

Operations and Maintenance Methods

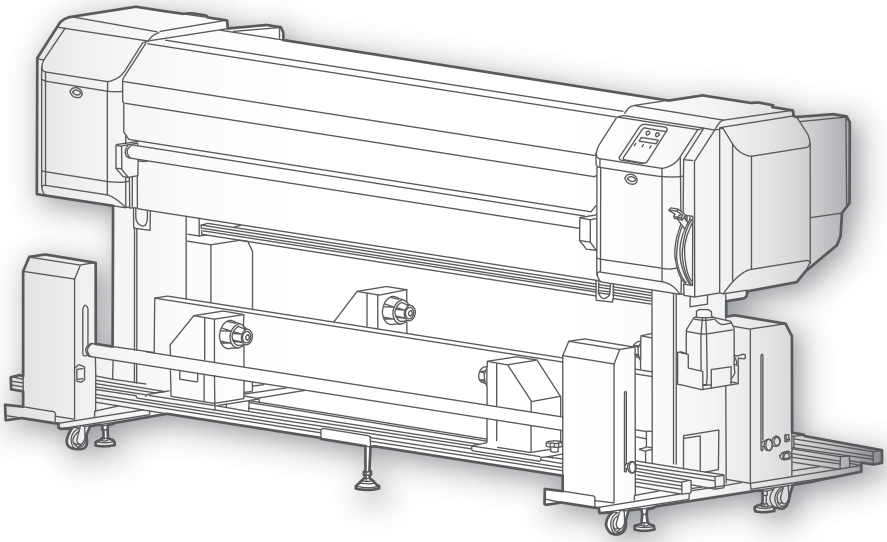

- Unauthorized copying or duplication of the whole or part of the contents of this manual is prohibited.
- Every care has been taken in writing the contents of this manual, but please contact MUTOH or the dealer you purchased the product from if you find any unclear, erroneous or otherwise unsatisfactory content in the manual.
- Please be aware that MUTOH will not be liable in any way for failures or accidents that result from handling or operating the printer according to any procedures other than those set forth in this manual.
- Company names and product names that appear in this manual are registered trademarks of the respective companies.

For Users in Europe

The CE marking is a mandatory European marking for certain product groups to indicate conformity with the essential health and safety requirements set out in European Directives.

By affixing the CE marking, the manufacturer, his authorized representative, or the person placing the product on the market or putting it into service ensures that the item meets all the essential requirements of all applicable EU directives and that the applicable conformity assessment procedures have been applied.

For Users in the United States

This equipment has been tested and found to comply with the limits for a Class A digital device, pursuant to Part 15 of the FCC Rules.
These limits are designed to provide reasonable protection against harmful interference when the equipment is operated in a commercial environment.

This equipment generates, uses, and can radiate radio frequency energy and, if not installed and used in accordance with the instruction manual, may cause harmful interference to radio communications.
Operation of this equipment in a residential area is likely to cause harmful interference in which case the user will be required to correct the interference at his own expense.

Contents

Chapter 1 Basic Operations

Introduction 9

Name of each part 9
Menu chart 14
System configurations of this product 20
Connecting to a Computer 21
Launching/Displaying/Finishing MUTOH Status Monitor (MSM) 22
Printing area 23
Requirements for usable media 24
Cautions in using this product 25

How to use the ink gutter 26

Take-up System 27

Take-up Methods 27
Operation 28
Adjusting the Weight 31
Adjusting the Rail 33
Adjusting the Slack Detection Sensor 35

Powering ON / OFF 36

Printer 36
Take-up System 37

Loading the media 38

Set the media to the Feeding Unit 38
Put the media through the Rear roller Assembly 40
Loading the media to the Take-up Unit 42
After loading the media... 47

Nozzle check and cleaning 50

Nozzle check 50
Cleaning 51

Setting the Printing Precision 52

Head adjustment 52
Print quality adjustment 54
Media feed adjustment 56

What you can do during printing 58

Pausing/Restarting printing 58
Canceling printing 58
What you can do on the operation panel during printing 58

Chapter 2 Advanced Operations

Introduction 63

Operating the keys to use the menus 63
Panel setup menu 64

Menu 1: Setup 67

Set 1: User Type 67
Set 2: Spitting 78
Set 3: Side Margin 79
Set 4: Media Initial 79
Set 5: Media Width 80
Set 6: Output Mode 80
Set 7: Origin 81
Set 8: Head Travel 81
Set 9: Multi Strike 82
Set 10: Strike Wait 82
Set 11: Slant Check 82
Set 12: Auto Cleaning 83
Set 13: Ink Status 84
Set 14: Media Length 84
Set 15: Exhaust Fan 85
Set 16: Longstore 85
Set 17: CR Maintenance 85
Set 18: Initialization 86
Set 19: Life Times 86
Set 20: IP Address 87
Set 21: Subnet Mask 87
Set 22: Gateway 87
Set 23: Header Dump 88
Set 24: Single Head 88
Set 25: Start Feed 89
Set 26: Alert Buzzer 89
Set 27: PF Feed 90
Set 28: Temporary 90

Menu 2: Test Print 91

Test 1: Nozzle Check 91
Test 2: Mode Print 91
Test 3: Setup List 92
Test 4: Palette 92
Test 5: Head Adjust 93

Menu 3: Cleaning 95

Menu 4: Menu Option 96

Menu 5: Version 97

Menu 6: Sleep Mode 97

Sleep Mode 1: Set Timer 97
Sleep Mode 2: Start 97

Menu 7: Display 98

Display 1: Language 98
Display 2: Temperature 98
Display 3: Length 98
Display 4: Remain Ink 99

Menu 8: Job Status 100

Chapter 3 Maintenance

Maintenance 102

Checking ink and replacing ink cartridge 103

Checking ink level 103
When it becomes time to replace ink cartridge 104
Replacing ink 104

Emptying waste fluid tank 107

Emptying waste fluid tank 107

Cleaning each part 108

Head cleaning 108
Cleaning of cleaning wiper 110
Cleaning of print head circumference 113
Inside cleaning 115
Maintaining the ink gutter 116
Cleaning the Take-up System 122

Replacing consumable parts 123

Replacing absorption material for the flushing box 123
Replacing the ink gutter filter 126

Moving or transporting the printer 128

Moving the printer 128
Transporting the printer 129
Long-term storage 130
Performing initial charging after head cleaning 133

Chapter 4 Appendix

Messages and Error Messages 136

Status messages 136
Error message display and remedies 138
Error requiring restart 140

Troubleshooting 141

Installation and initial setup troubleshooting. 141
Boot-up troubleshooting 142
Media-related troubleshooting 143
Take-up System-related troubleshooting 144
Printing-related troubleshooting 146

Specifications of this product 149

Drawing area 149
List of specifications 150

Options / Supply list. 153

Revision History 153

Chapter 1 Basic Operations

Introduction 9

Name of each part 9
Menu chart 14
System configurations of this product 20
Connecting to a Computer 21
Launching/Displaying/Finishing MUTOH Status Monitor (MSM). 22
Printing area 23
Requirements for usable media. 24
Cautions in using this product 25

How to use the ink gutter 26

Take-up System 27

Take-up Methods 27
Operation. 28
Adjusting the Weight 31
Adjusting the Rail 33
Adjusting the Slack Detection Sensor 35

Powering ON / OFF. 36

Printer 36
Take-up System 37

Loading the media 38

Set the media to the Feeding Unit 38
Put the media through the Rear roller Assembly. 40
Loading the media to the Take-up Unit 42
After loading the media.... 47

Nozzle check and cleaning 50

Nozzle check. 50
Cleaning 51

Setting the Printing Precision. 52

Head adjustment 52
Print quality adjustment. 54
Media feed adjustment. 56

What you can do during printing 58

Pausing/Restarting printing 58
Canceling printing 58
What you can do on the operation panel during printing 58

Name of each part

Printer's main body

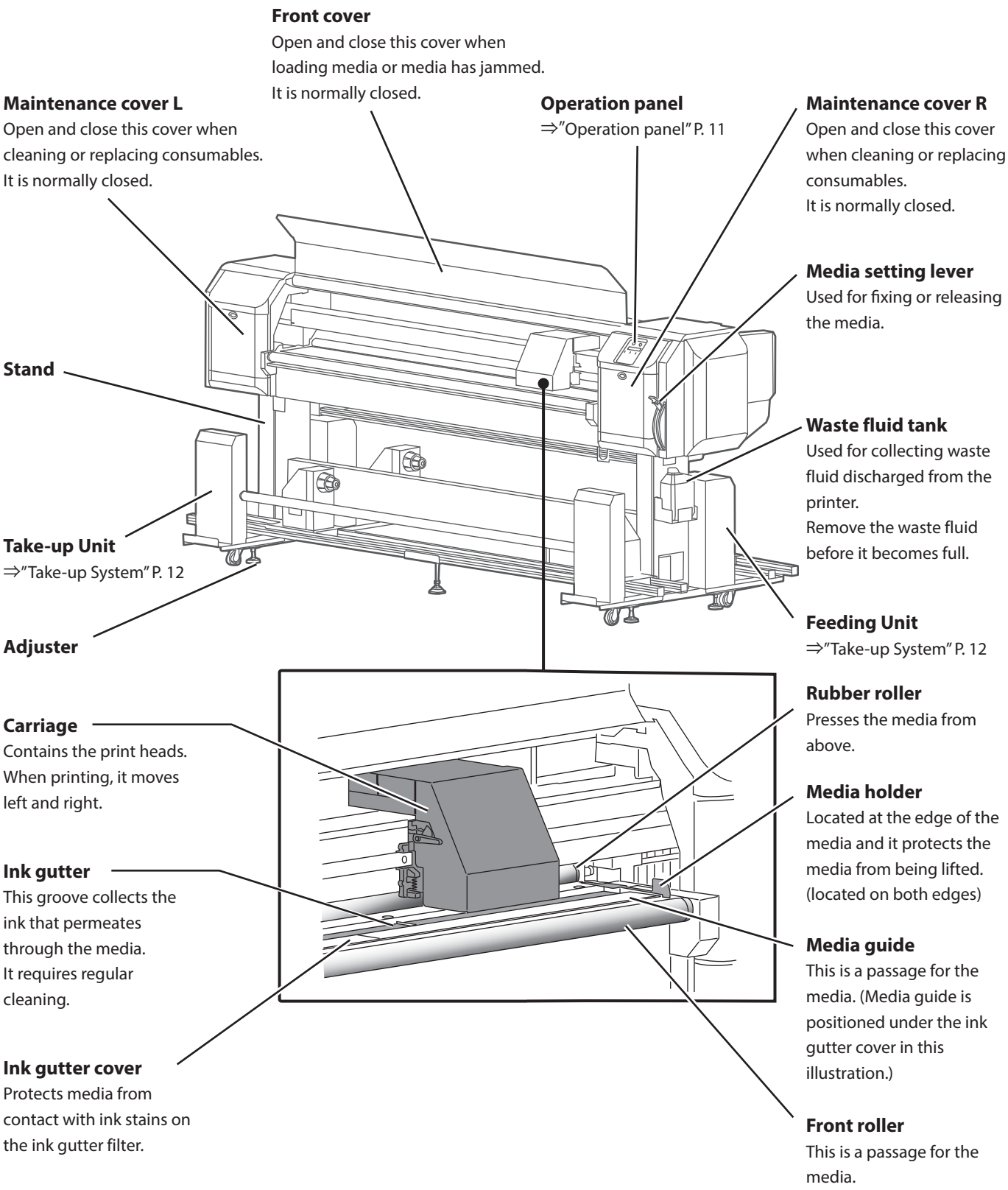

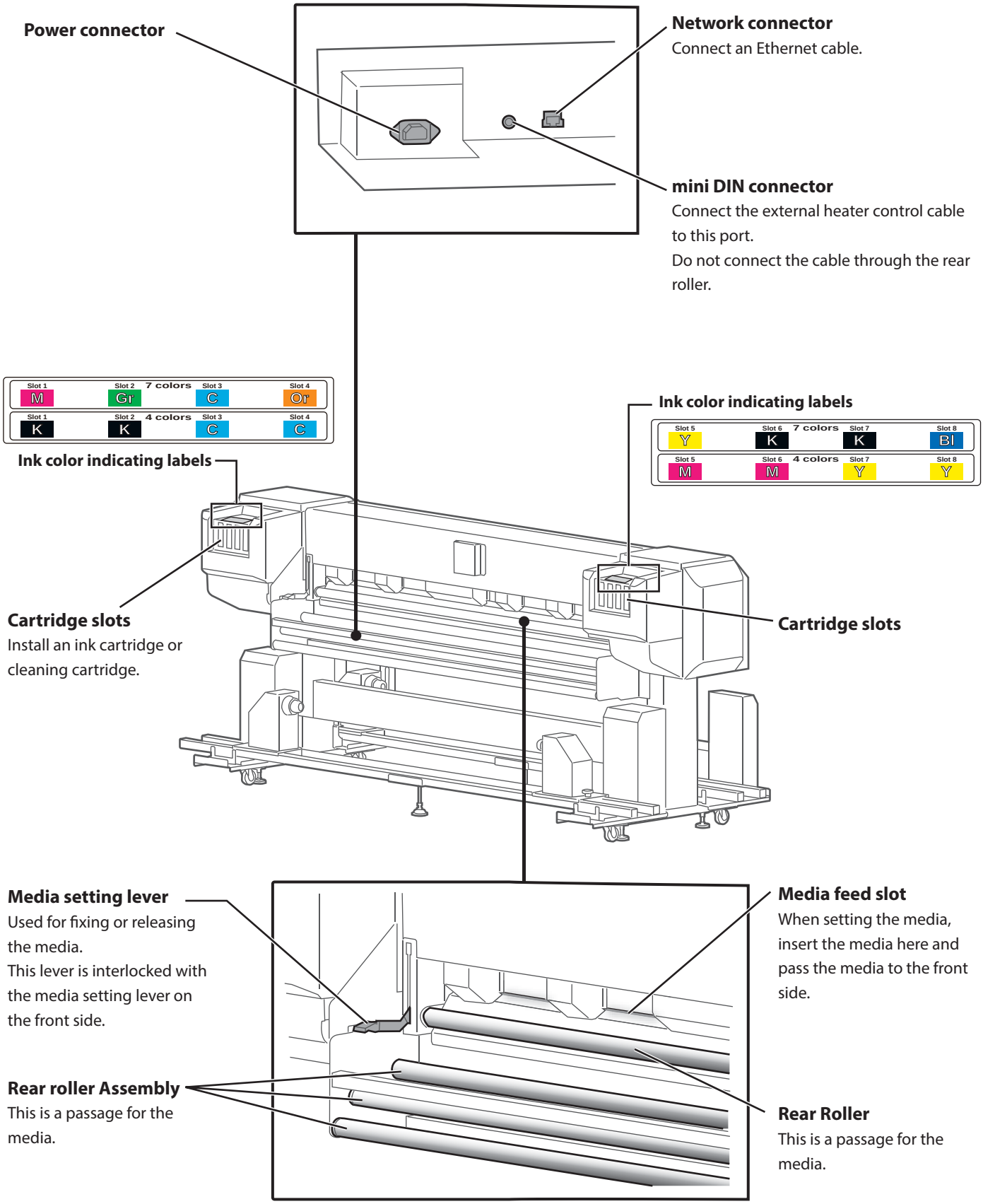
Power connector
Network connector
Connect an Ethernet cable.
mini DIN connector
Connect the external heater control cable to this port.
Do not connect the cable through the rear roller.
Slot 1 M
Slot 2 Gr
7 colors
Slot 3 C
Slot 4 Or
Slot 1 K
Slot 2 K
4 colors
Slot 3 C
Slot 4 C
Ink color indicating labels
Ink color indicating labels
Slot 5 Y
Slot 6 K
7 colors
Slot 7 K
Slot 8 Bl
Slot 5 M
Slot 6 M
4 colors
Slot 7 Y
Slot 8 Y
Cartridge slots
Install an ink cartridge or cleaning cartridge.
Cartridge slots
Media setting lever
Used for fixing or releasing the media.
This lever is interlocked with the media setting lever on the front side.
Media feed slot
When setting the media, insert the media here and pass the media to the front side.
Rear roller Assembly
This is a passage for the media.
Rear Roller
This is a passage for the media.

Operation panel

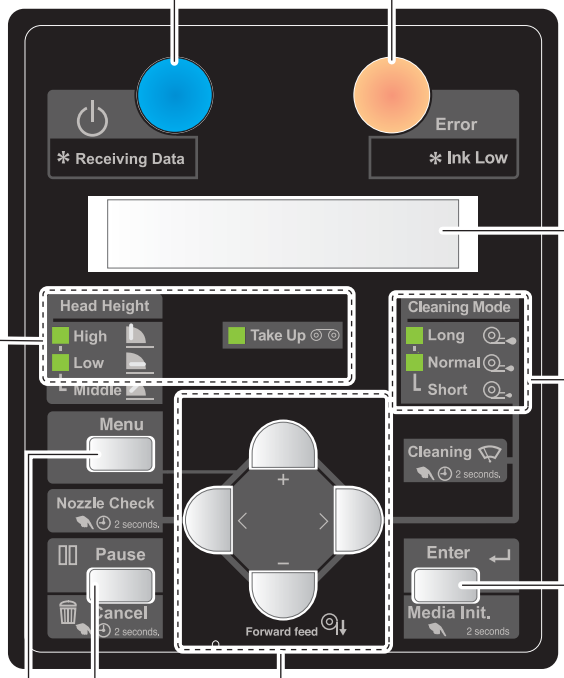

Power button

- Pressing this turns the power on. Lights steady in blue when the power is on.
- Pressing this once more turns the power off. Is unlit when the power is off.
- Flashes while data is being received, in the sleep mode, and at other times.

[Reference]

The ⏻ symbol means "standby". Even when the power button is not turned on, the printer consumes a tiny amount of power so long as the power cable is connected. This state is referred to as the power being "off" in this Manual.

Error indicator

- Lights up in orange when an error has occurred or a cover is open.
- Flashes when the ink is low.

Display

Displays the printer status, setting menu, errors and so on.

[Cleaning Mode] indicators

Light steady green to indicate the head cleaning mode.

[Enter] key

When you have set a media in place, pressing and holding this down for 2 seconds or longer will run a media set check.

When setting the menu:

- Press this to go to the menu item you select.
- Press this to confirm a set value.

[Head Height] indicator

- High setting: High indicator is ON.
- Middle setting: High and Low indicators are ON.
- Low setting: Low indicator is ON

[Take up] indicator

Lights steady green when the Output mode is set to "Take-up".

[Menu] key

Used for accessing and exiting the menu.

[Pause] / [Cancel] key

- Press this key to pause printing.
- Holding this key pressed down for 2 seconds or longer will cancel the print job and delete the data received.

When setting the menu:

- Cancels a change of a setting value.

[+] key

When setting the menu:

- Press this to move to another menu item
- Press this to change a set value.

[-] / [Forward feed] key

Media is fed in the forward direction.

When setting the menu:

- Press this to move to another menu item
- Press this to change a set value.

[<] / [Nozzle Check] key

Pressing and holding this down for 2 seconds or longer will run a nozzle check.

When setting the menu:

- Press this to change a set value.

[>] / [Cleaning Mode] key

- For changing the cleaning mode.
- Pressing and holding this down for 2 seconds or longer will execute head cleaning.

When setting the menu:

- Press this to move to a lower level of menu items.
- Press this to change a set value.

Take-up Unit

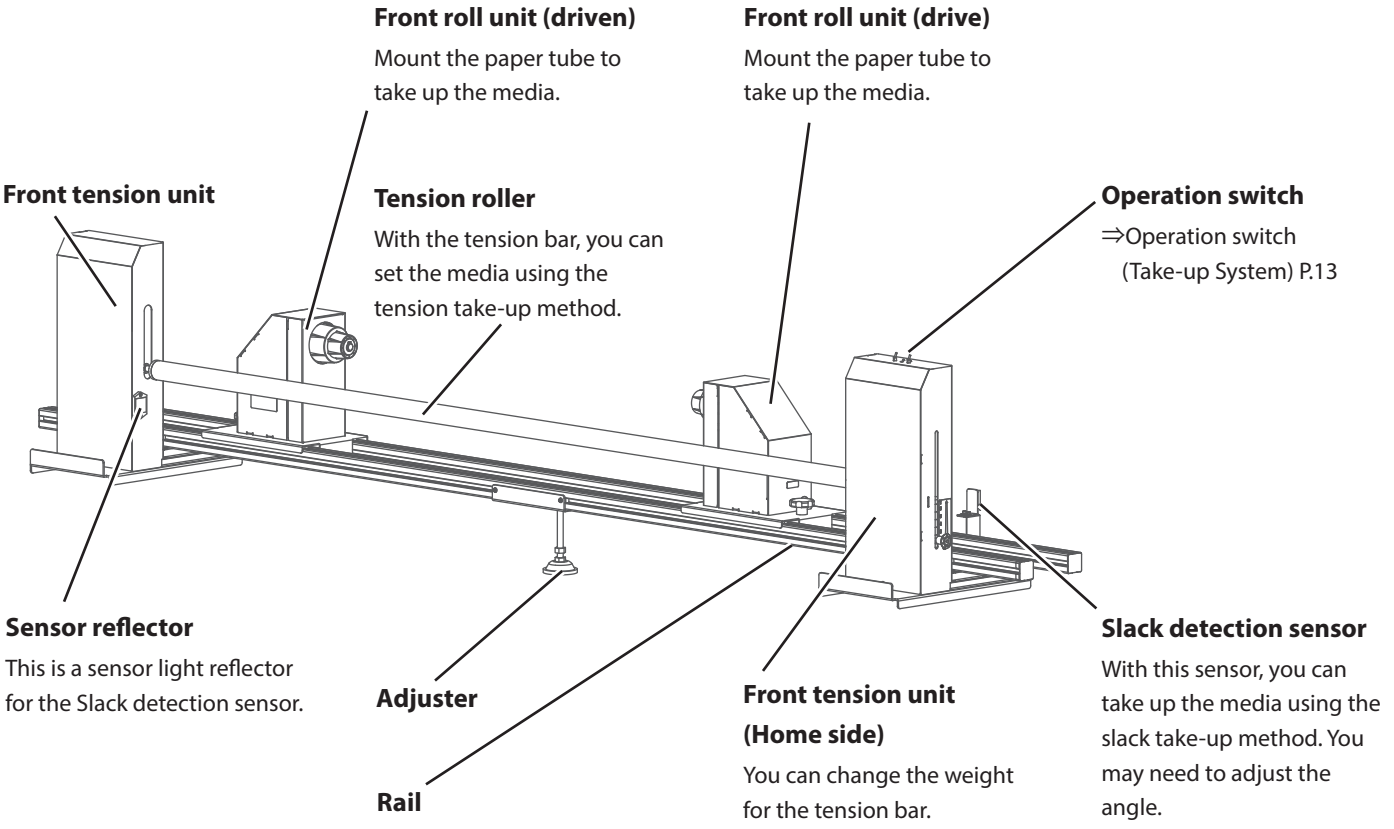

Feeding Unit

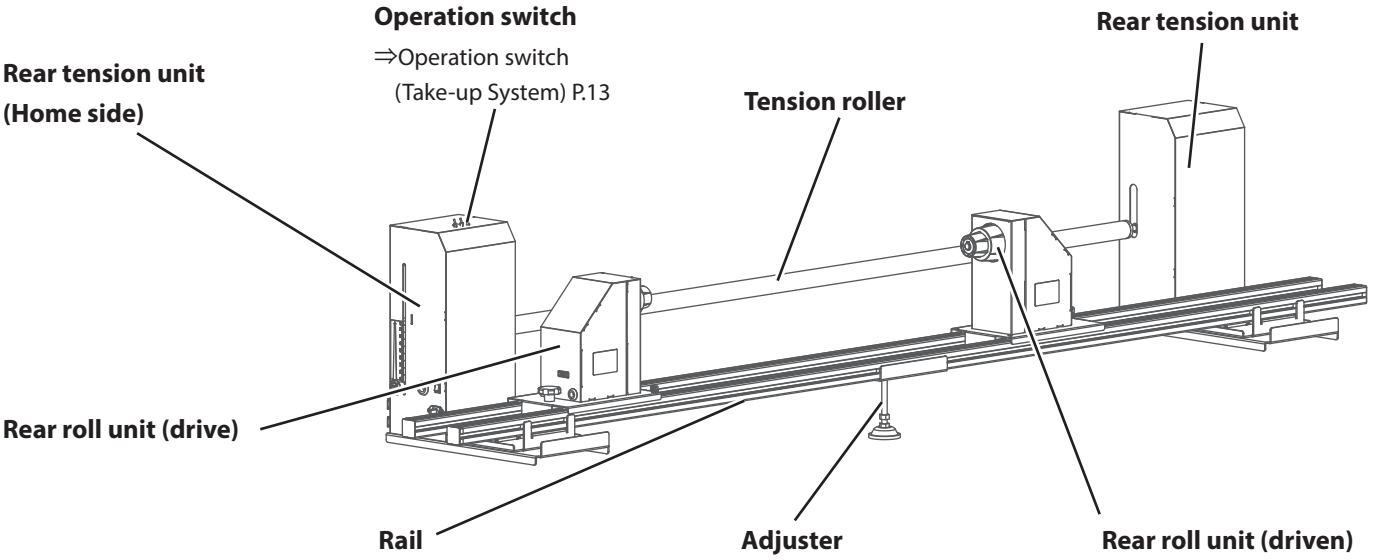

Take-up Unit

Error lamp
Lights up or blinks red to indicate an error.

① AUTO switch
Sets the media rolling method. Unless the switch is set to OFF, the printer will automatically feed or take up the media when printing.

•OUTSIDE ROLL
Use this setting for the outside roll media.

•OFF
The media is not taken up automatically.

•INSIDE ROLL
Use this setting for the inside roll media.

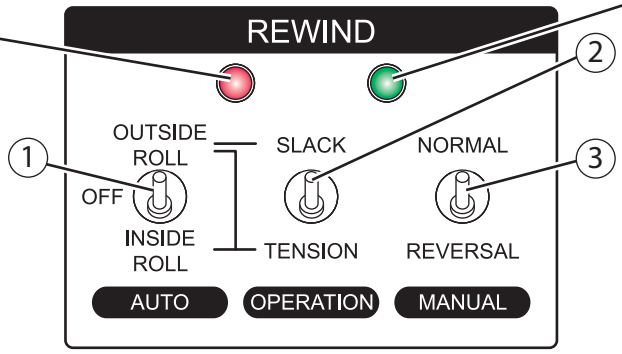

② OPERATION switch
Sets the take-up method.

•SLACK
Use this setting for the "Slack take-up" method.

•TENSION
Use this setting for the "Tension take-up" method.

Operation lamp
Lights up green when the power is on. During the operation, it blinks.

③ MANUAL switch
By holding the switch in a slanted position, you can operate the Take-up Unit manually.

•NORMAL
Use this setting to take up the media.

•REVERSAL
Use this setting to feed the media.

<Attention>
If the media rolling method and the AUTO switch setting don't match, the operations above are not available.

Feeding Unit

Error lamp

① AUTO switch
Here you can configure the Feeding Unit during the printing operation.

•OUTSIDE ROLL
Use this setting for the outside roll media.

•OFF
The media is not taken up automatically.

•INSIDE ROLL
Use this setting for the inside roll media.

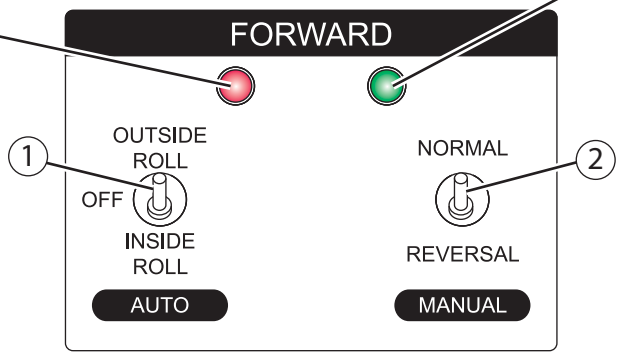

Operation lamp

② MANUAL switch
By holding the switch in a slanted position, you can operate the Feeding Unit manually.

•NORMAL
Use this setting to feed the media.

•REVERSAL
Use this setting to take up the media.

<Attention>
If the media rolling method and the AUTO switch setting don't match, the operations above are not available.

Menu chart

Setting menu 1

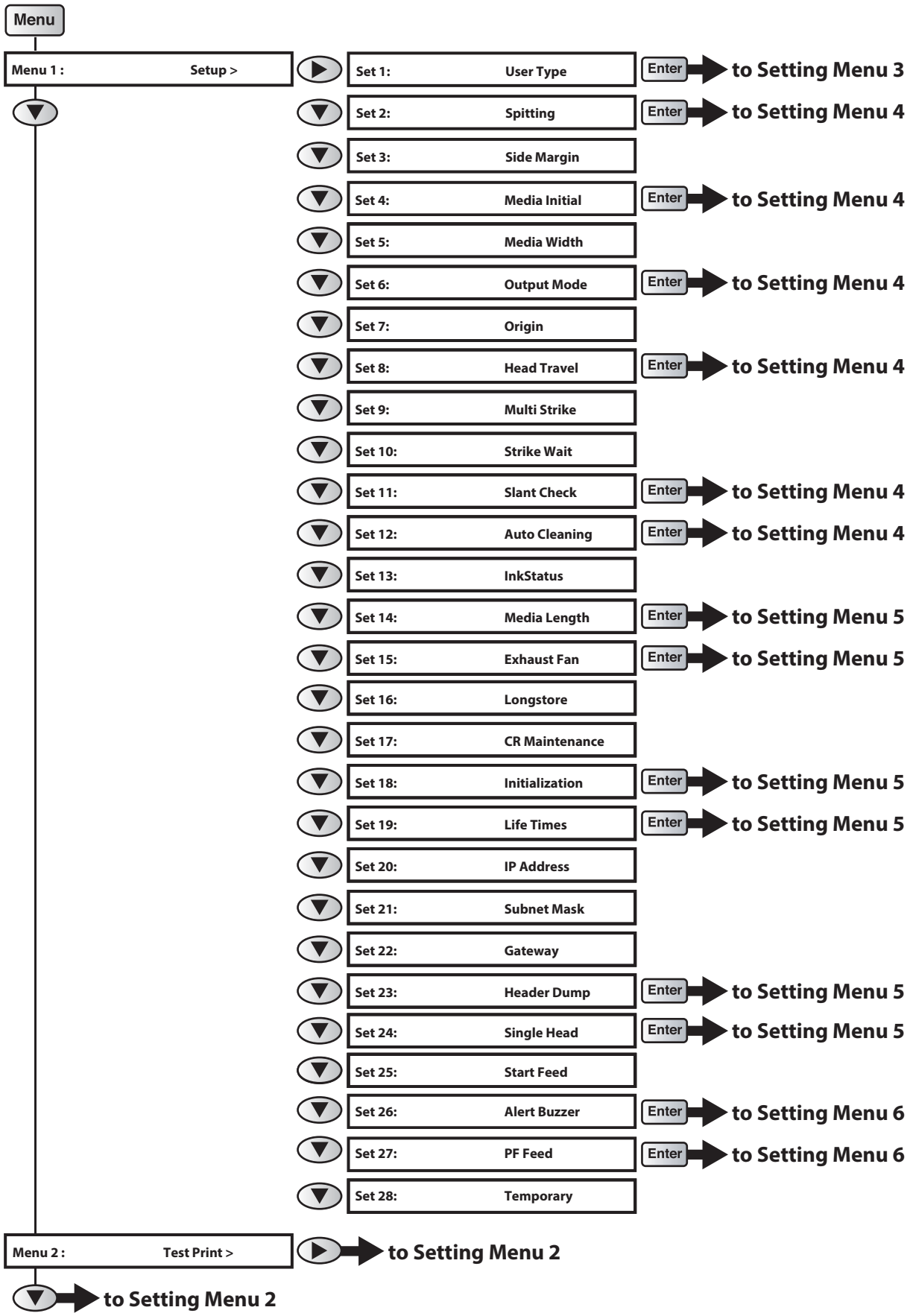

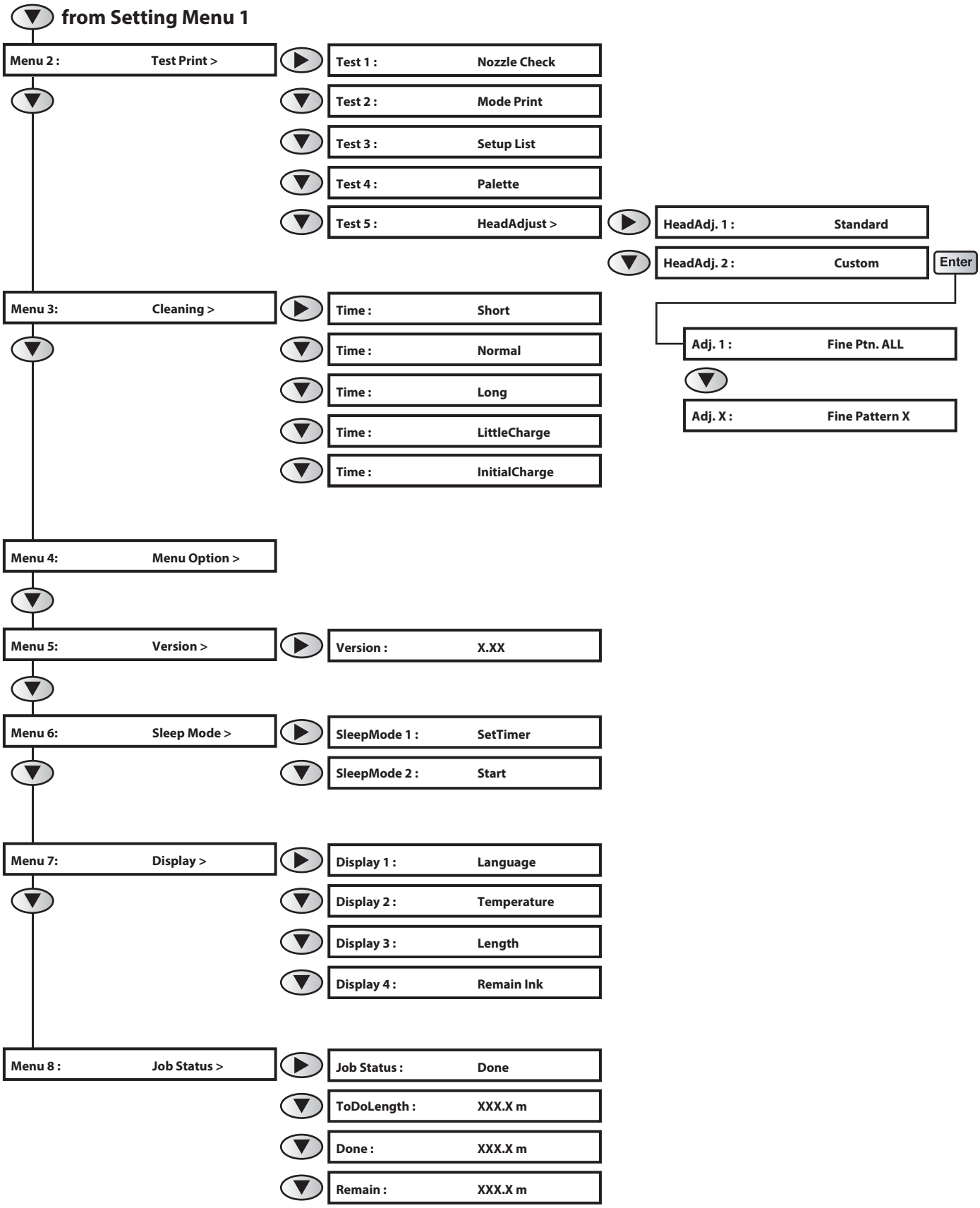
from Setting Menu 1
Menu 2 : Test Print >
Test 1 : Nozzle Check
Test 2 : Mode Print
Test 3 : Setup List
Test 4 : Palette
Test 5 : HeadAdjust >
HeadAdj. 1 : Standard
HeadAdj. 2 : Custom
Enter
Adj. 1 : Fine Ptn. ALL
Adj. X : Fine Pattern X
Menu 3: Cleaning >
Time : Short
Time : Normal
Time : Long
Time : LittleCharge
Time : InitialCharge
Menu 4: Menu Option >
Menu 5: Version >
Version : X.XX
Menu 6: Sleep Mode >
SleepMode 1 : SetTimer
SleepMode 2 : Start
Menu 7: Display >
Display 1 : Language
Display 2 : Temperature
Display 3 : Length
Display 4 : Remain Ink
Menu 8 : Job Status >
Job Status : Done
ToDoLength : XXX.X m
Done : XXX.X m
Remain : XXX.X m

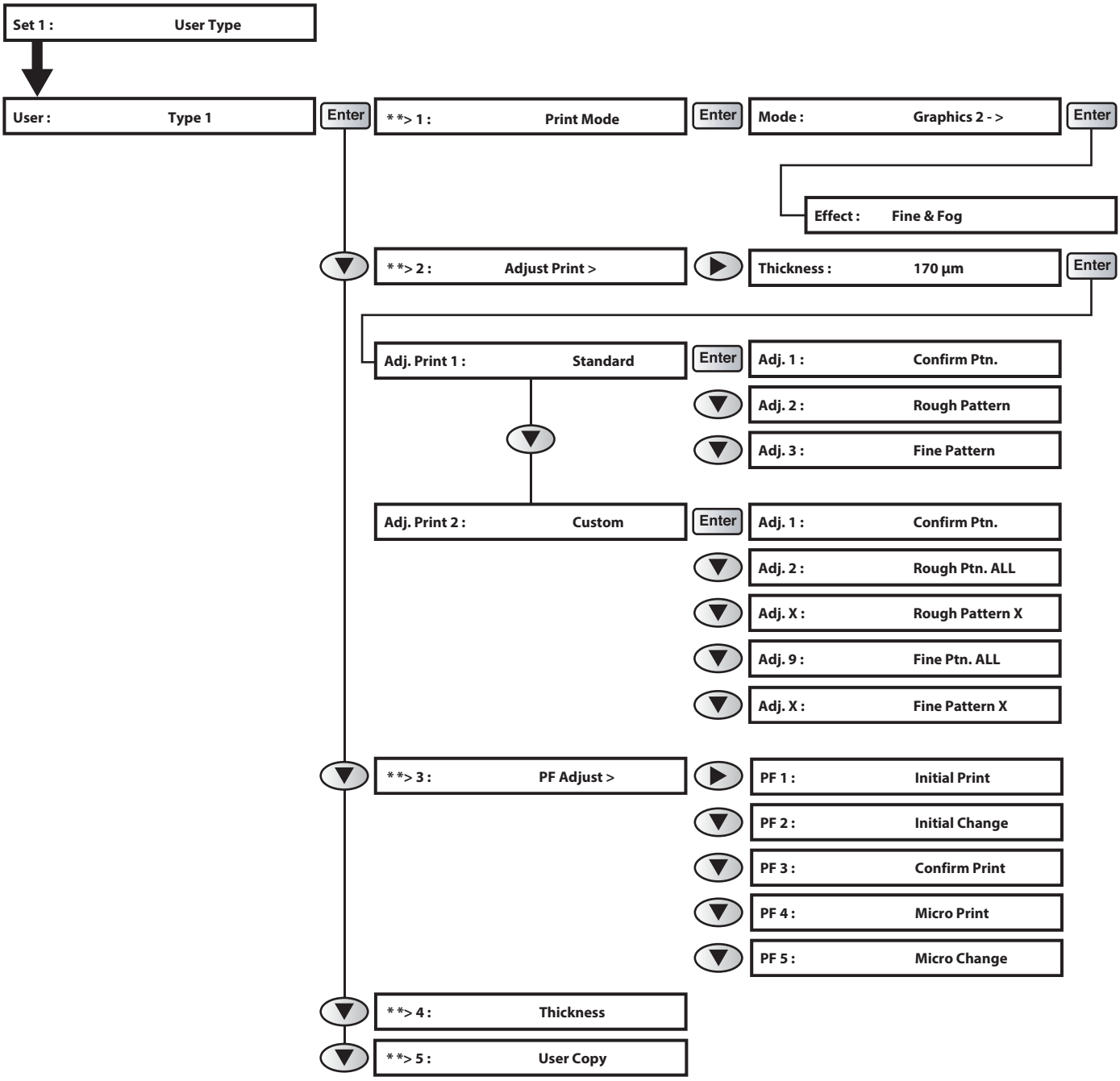
Set 1 : User Type
User : Type 1
Enter
**> 1 : Print Mode
Enter
Mode : Graphics 2 - >
Enter
Effect : Fine & Fog
**> 2 : Adjust Print >
Thickness : 170 µm
Enter
Adj. Print 1 : Standard
Enter
Adj. 1 : Confirm Ptn.
Adj. 2 : Rough Pattern
Adj. 3 : Fine Pattern
Adj. Print 2 : Custom
Enter
Adj. 1 : Confirm Ptn.
Adj. 2 : Rough Ptn. ALL
Adj. X : Rough Pattern X
Adj. 9 : Fine Ptn. ALL
Adj. X : Fine Pattern X
**> 3 : PF Adjust >
PF 1 : Initial Print
PF 2 : Initial Change
PF 3 : Confirm Print
PF 4 : Micro Print
PF 5 : Micro Change
**> 4 : Thickness
**> 5 : User Copy

Setting menu 4

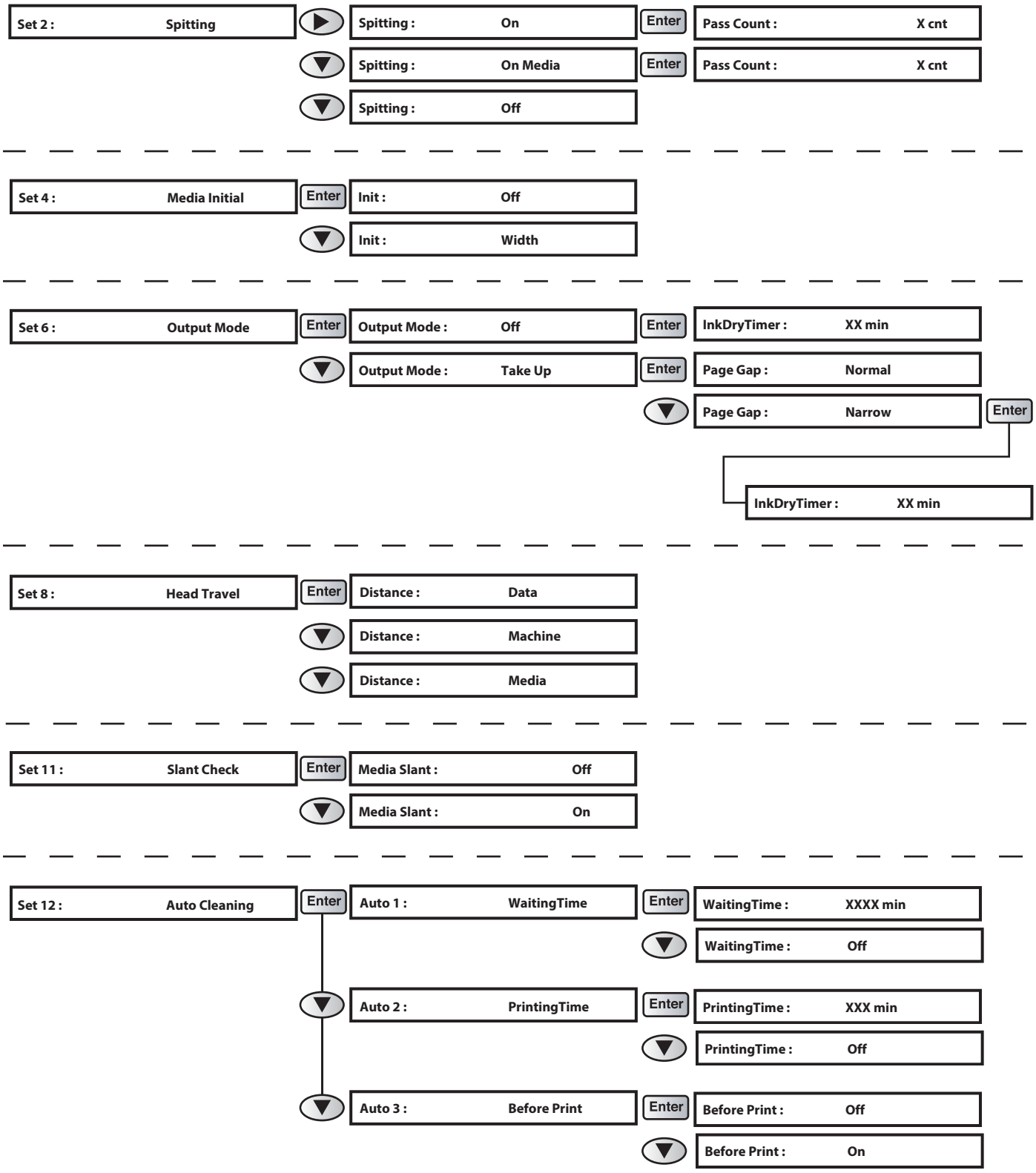

Setting menu 5

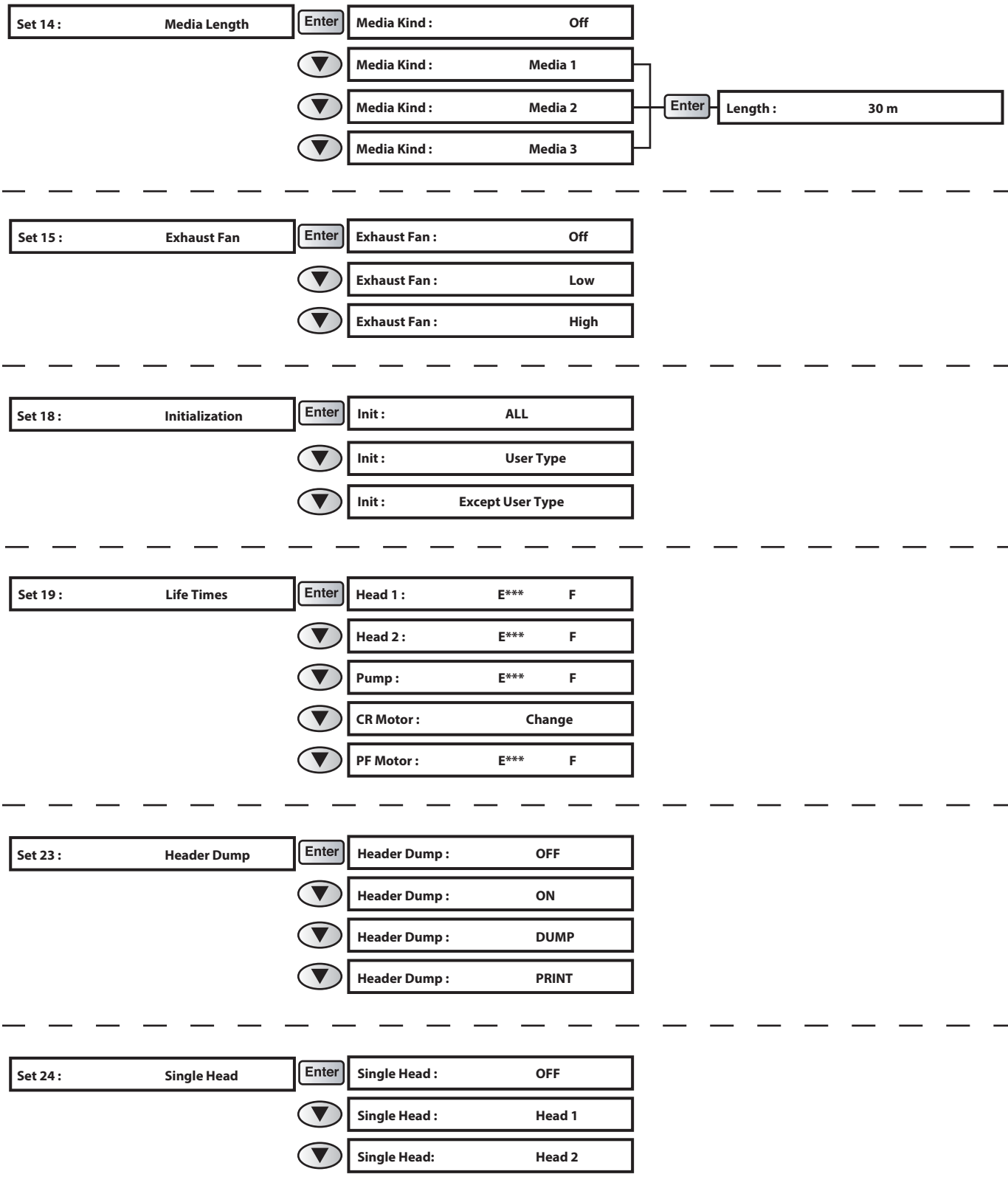

Setting menu 6

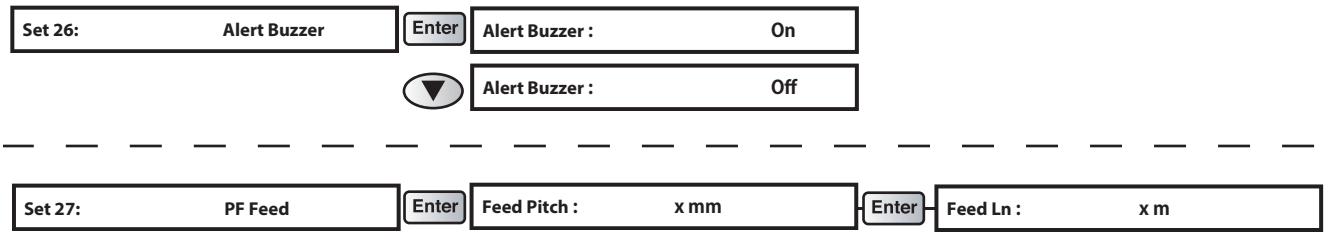

Menu during printing

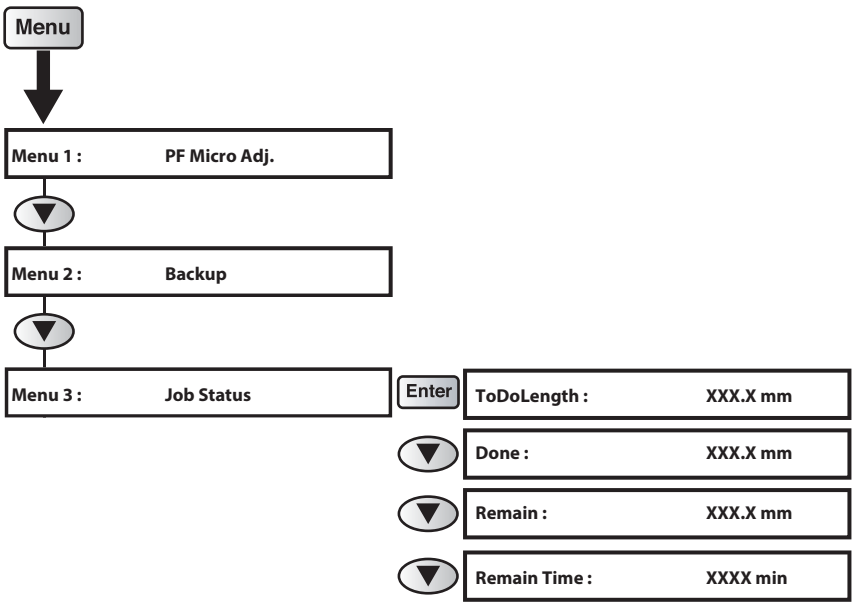

System configurations of this product

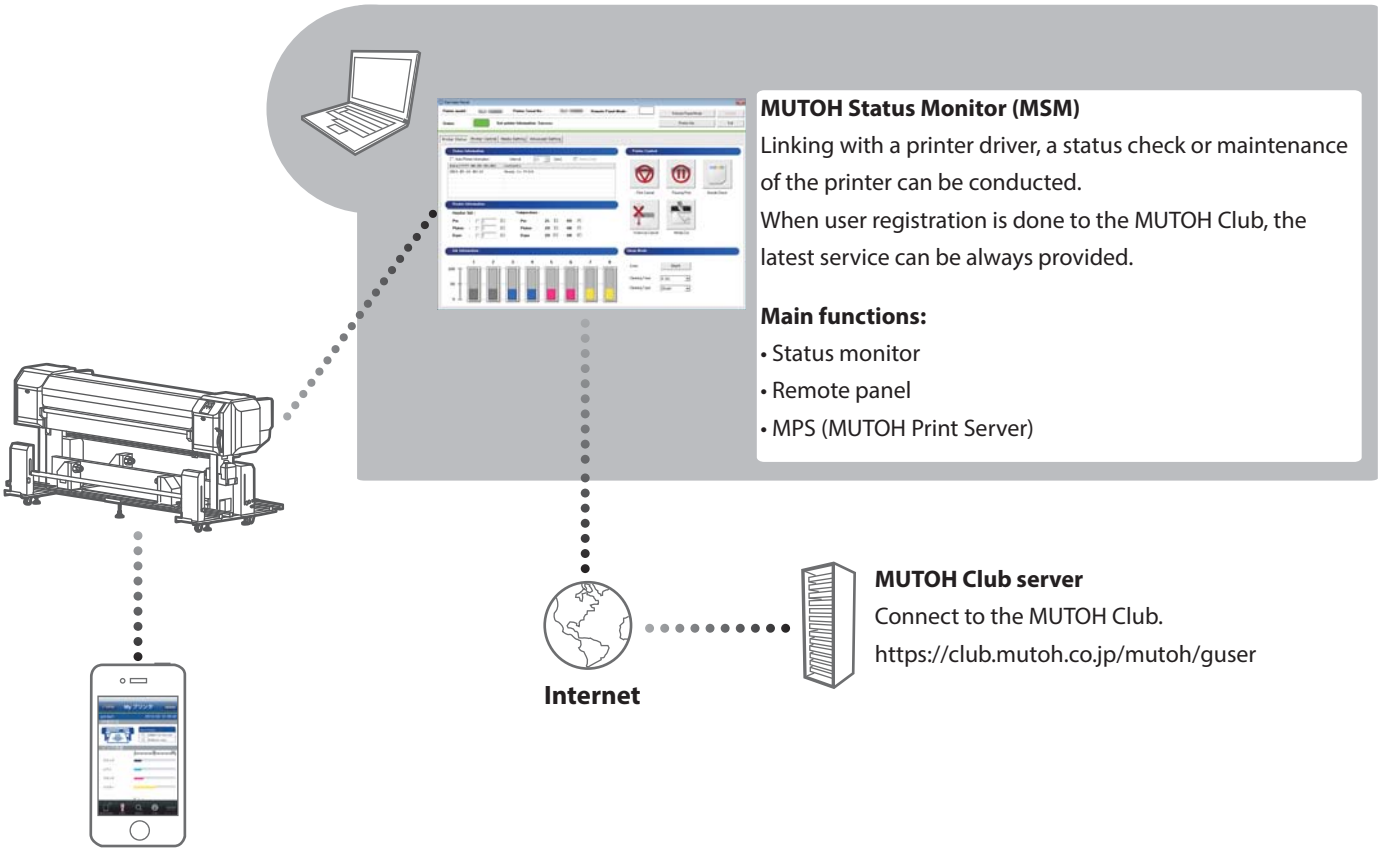

VSM Mobile

Enables you to remotely monitor printer status and control your printer through remote panel on your smartphone or tablet.

***1 MUTOH Club**

This Web service provides free useful contents to users.
Have user registration done to use various services.

Main functions:

- Downloading the latest application and manual
- Downloading media profiles
- Printer status check (When using the printer information supplying service of MSM)

<Print Support Software>

To get the best out of this product, use the MUTOH Print Server (MPS) function available from MUTOH Status Monitor (MSM).
You can download the latest version of MSM from the MUTOH Club Server.
(To use MPS, specify the output port of RIP software to MPS.)

Connecting to a Computer

[1]

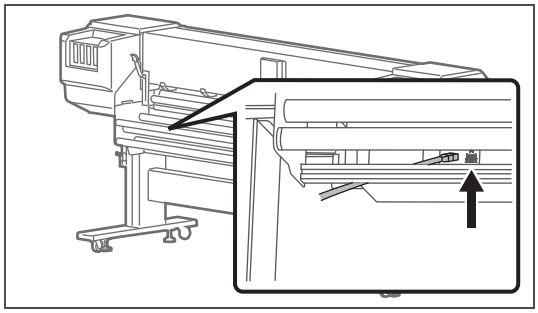

Connect the Ethernet cable to the product.

[2]

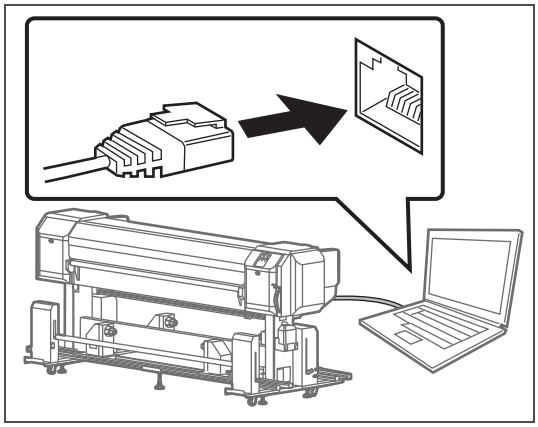

Connect the Ethernet cable to the computer.

[3] Use the printer operation panel to set the IP address, subnet mask and gateway.

☞ "Set 20: IP Address" P. 87, "Set 21: Subnet Mask" P. 87, "Set 22: Gateway" P. 87

Important!

- **The above figure is the example of peer-to-peer connection between this product and computer. Connection method differs depending on the usage environment.**
- **If you use the product with a LAN, connect the cable so that the computer and printer are on the same subnet.**

Launching/Displaying/Finishing MUTOH Status Monitor (MSM)

Launching MSM

Windows 8 / Windows 8.1

- In the [Start] screen, click [Desktop].
- Double click the MSM icon on the Desktop.

Windows 10 / Windows 7

Double click the MSM icon on the Desktop.

Note

Launching from the Start Menu of Windows

- Windows 8 / Windows 8.1
  Right click somewhere the [Start] screen tiles are not displayed to display the application bar, and click [All Apps].
- Windows 10 / Windows 7
  From the [Start] menu, click [All Programs] (or [All Apps]) - [MUTOH] - [MUTOH Status Monitor].

Displaying MSM

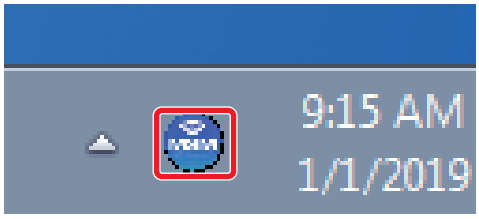

Double click the MSM icon in the task tray.

Displaying remote panel

The remote panel is used to view this product's status or operate.

Click [Remote Panel].

- The remote panel opens.

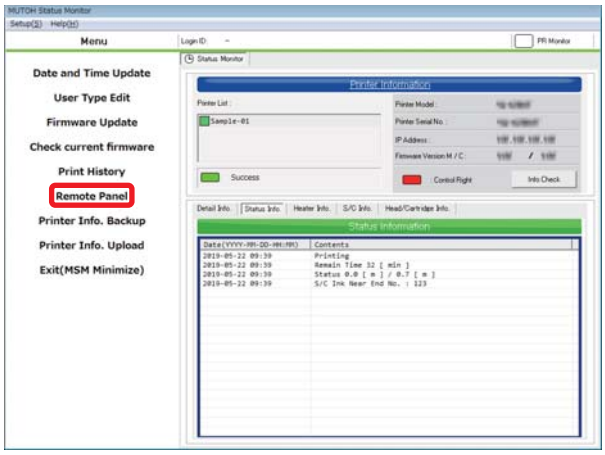

Finishing MSM

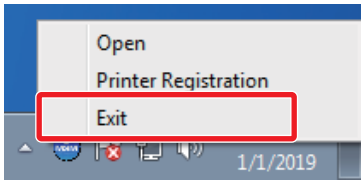

Right click the MSM icon in the task tray, and click [Exit].

Note

When using normally, do not finish MSM. When closing the MSM window, click [Settings] - [Close].

Windows 8.1

Click the Down Arrow in the [Start] screen.
Click [MUTOH Status Monitor].

Printing area

Printing is always started from Origin position (print start point).

See the figure below as example.

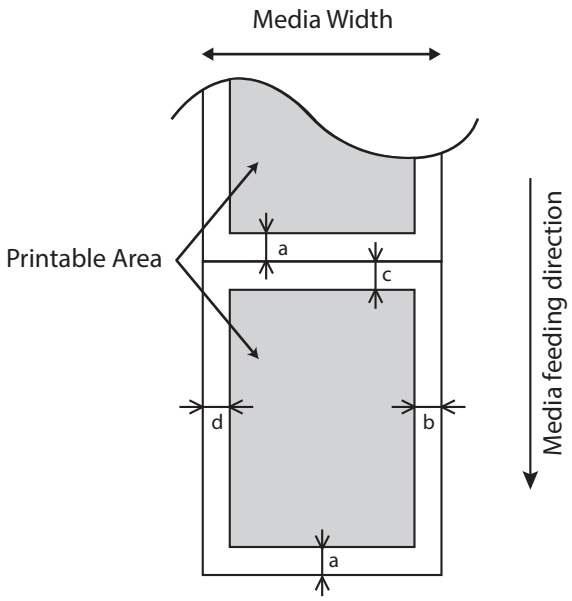

a=5 mm *1
b=5 mm to 25 mm (According to the Operation panel settings)
c=5 mm *1
d=5 mm to 25 mm (According to the Operation panel settings)

*1 When the "Output Mode" is set to "Take Up", the "Page Gap" is set to "Narrow".
When the "Page Gap" is set to "Normal" (factory default), the gap (a + c) will be approx. 58 mm.

Requirements for usable media

Media that meet the requirements below can be used with this printer.

Usable sizes

Maximum width	1,910 mm
Minimum width	900 mm
Maximum thickness	3.5 mm (When the head height is set to “High”)
Weight	100 kg or less

Important!

The default setting for the head height is “Low”.
When the head height is set to “Low”, the maximum available media thickness is 1.3 mm.

Media Rolling Methods

This product allows the following media rolling methods.

Outside Roll

With this rolling method, the printed surface is on the outside.

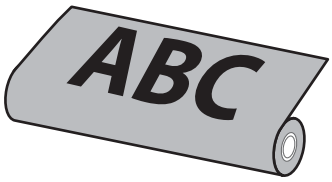

Inside Roll

With this rolling method, the printed surface is on the inside.

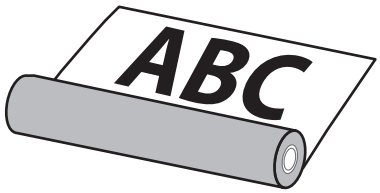

Cautions in using this product

Please use this product periodically

It is recommended to use this product once a week. When left unused for a long time, the print head nozzles can suffer from clogging and it leads to printer damage.

Please handle ink bag carefully

- Before operation, make sure to read the Material Safety Data Sheet (SDS).
- Do not disassemble Ink bag.
  If disassembled, there is a possibility that ink might come into contact with your eyes or skin.
- When handling the ink bag, be careful not to let the ink get in your eyes or on your skin.
  If the ink gets in your eye or on your skin, immediately wash it off with water.
  If not, it could cause bloodshot eyes or light inflammation. Should any anomalies occur, immediately seek medical attention.
- DO NOT drop or hit an ink bag.
  Ink may leak from the bag.

Conduct periodic maintenance

This product requires daily maintenance.

- Check the nozzle before and after printing.
  If nozzle clog is found, conduct a head cleaning.
- Clean the cleaning wiper once a week.
- When this product is not used for a long time (a week or more), conduct a head cleaning once a week.
- Clean its inside once a month.
- Drain waste ink in the waste fluid tank periodically before it becomes full.

Some parts need to be replaced periodically

In this product, there are some parts required to be replaced after a long-term use.

- Parts required to be replaced by users: Absorption material for the flushing box, Ink gutter filter.
- Parts required to be replaced by service personnel: Various motors, Pumps, Print head.

How to use the ink gutter

This product comes with an ink gutter.

The ink gutter is a groove for collecting the ink that permeates through the media during the printing operation. Inside the gutter, there is a sponge (ink gutter filter).

How to use the ink gutter

- Open the ink gutter cover when printing.
- Open the ink gutter cover when replacing roll media.
- The ink gutter and the ink gutter filter need to be cleaned regularly.
  ☞ **"Maintaining the ink gutter" P. 116**
- The ink gutter filter needs to be replaced regularly.
  ☞ **"Replacing the ink gutter filter" P. 126**

Opening and closing the ink gutter

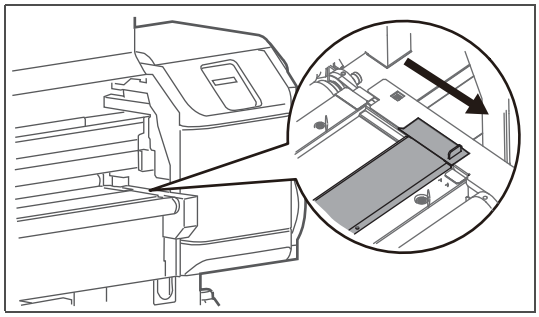

To open the ink gutter cover, pull the knob toward yourself.

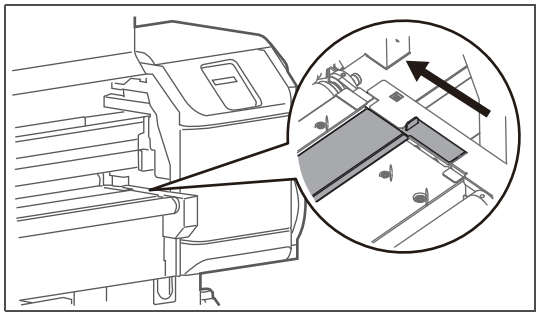

To close the ink gutter cover, push the knob backward.

Note

If the ink gutter cover isn't completely open, you cannot print.

Take-up System

Take-up Methods

With this product, there are 2 methods for setting roll media.
Use the method that is suitable for the media.

- Tension take-up method

Use the tension unit to apply load and take up the media.
By applying the right amount of load, you can prevent the prints from getting creased or misaligned.
This take-up method is suitable for most media.

When using this take-up method, set the OPERATION switch on the Take-up Unit to “TENSION”.

- Slack take-up Method

Use this method to take up the media without the tension unit.
This method is for the types of media that get creased during the tension take-up because too much load is applied.
This is suitable for thin media, light media, elastic media, and so on.

When using this take-up method, set the OPERATION switch on the Take-up Unit to “SLACK”.

Important!

The “SLACK” setting on this product doesn’t support inside roll media.
When the AUTO switch of the Take-up System is set to INSIDE ROLL, the operation won’t start even if the OPERATION switch is set to “SLACK”.

Operation

For details on how to set the media, see "Loading the media" P. 38.

Feeding the media after cutting

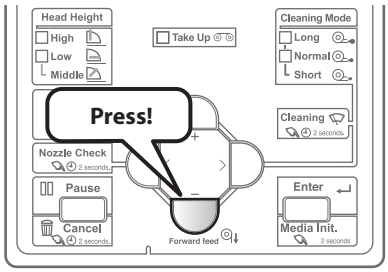

Press and hold the [-] key on the operation panel.

- The media will be fed.

Rolling back the media during the media setting operation

[1]

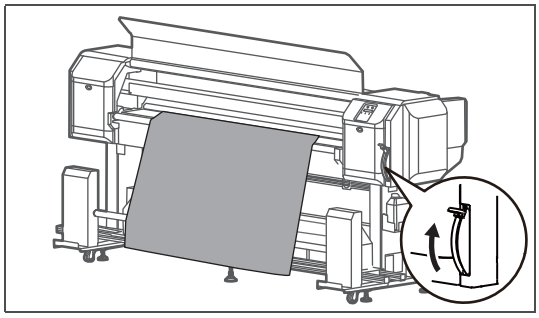

Raise Media setting lever.

[2]

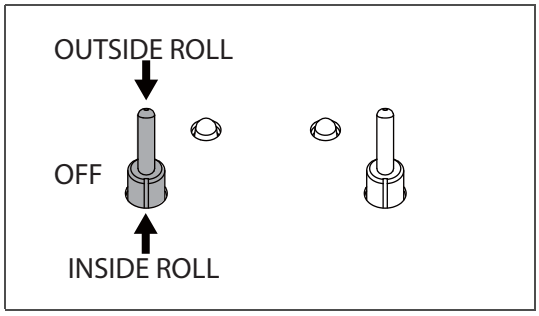

Set the AUTO switch of the Feeding Unit to “OFF”.

[3]

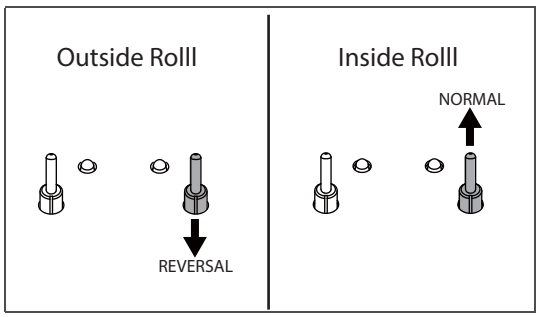

When using the outside roll:

- Put the MANUAL switch of the Feeding Unit in the “REVERSAL” position and keep it in that position for a while.

When using the inside roll:

- Put the MANUAL switch of the Feeding Unit in the “NORMAL” position and keep it in that position for a while.

When the red lamp lights up

[1]

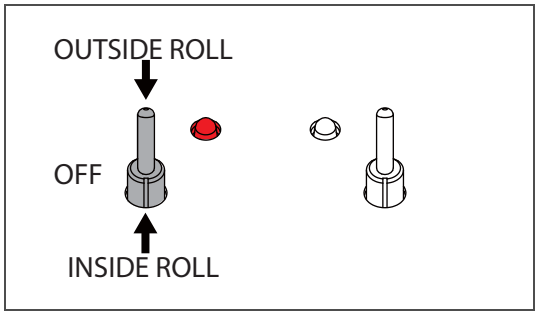

Set the AUTO switch on the side where the red lamp has lit up to “OFF”.

[2]

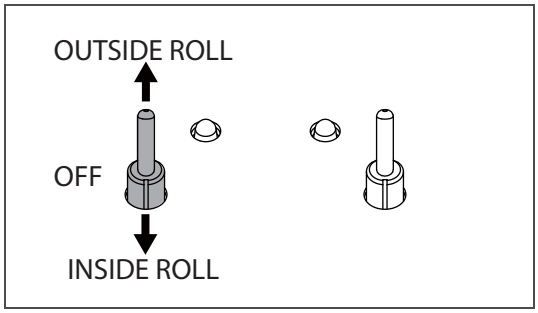

Set the AUTO switch according to the media rolling direction.

When “Media End/Take-up Error” is displayed on the operation panel

[1]

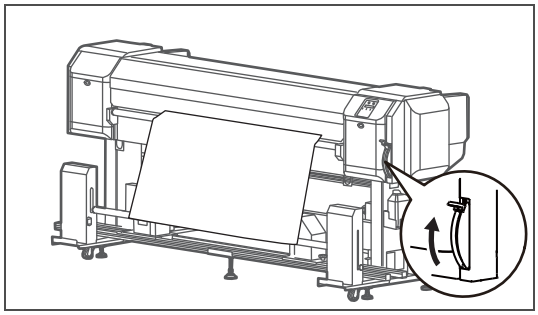

Raise Media setting lever.

[2]

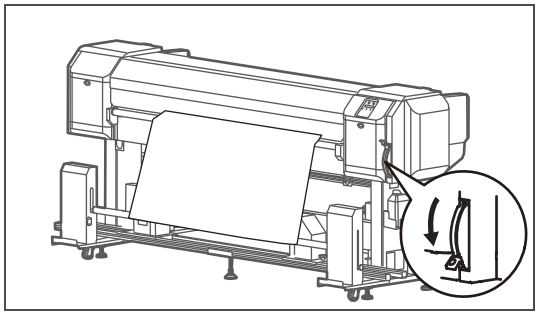

Lower Media setting lever.

- “Init. Media=Enter 2s” is displayed on the operation panel.

[3]

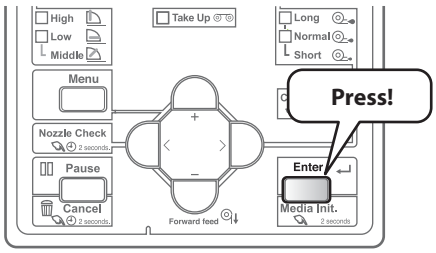

Press and hold the [Enter] key to 2 seconds or longer.

- “User: Type** OK?” is displayed on the operation panel.

[4]

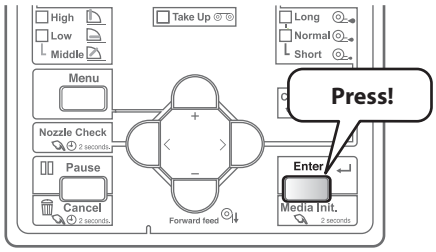

Press the [Enter] key on the operation panel.

- Media detection will start.

Adjusting the Weight

To print on the roll media using an appropriate tension, adjust the tension unit weight before loading the media.

- An appropriate tension: When the slack is taken up from the media. However, for the stretchable media, it should not be stretched too much.

Adjusting the Tension Unit Weight

The tension unit has a function to pull the front and rear edges of the media. Be careful with the following points and adjust the weight.

- The adjustment procedure is the same for both front and rear sides.
- Use the PF Feed menu to feed roll media. If the media has wrinkles, reduce the weight.
  Choose the most appropriate “Feed Pitch” and “Feed Length” settings for the number of passes of the selected print mode.
  ☞ **"Set 27: PF Feed" P. 90**

Important!

If the weight is too heavy or too light, the media may rub against the print head and become dirty.

1. Adjusting the tension unit weight (when inserting the pin)

[1]

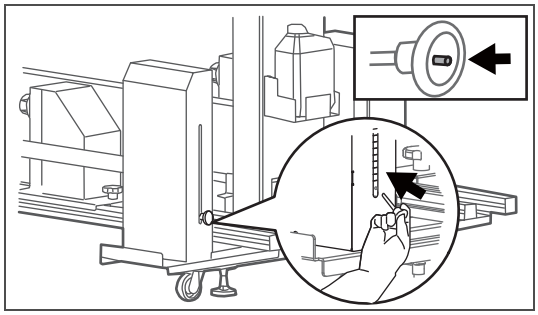

While pressing the button for the weight changing pin, insert it to the weight changing hole.

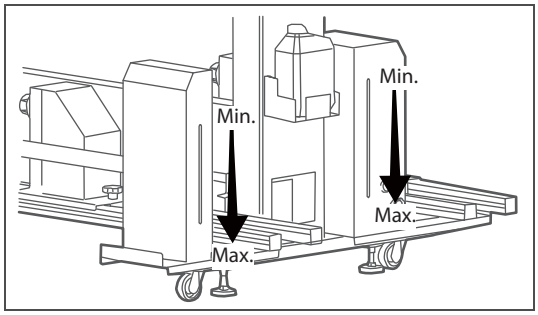

For the tension unit, if you insert the pin in the upper hole, the weight becomes lighter, and heavier if it is inserted in the lower hole.

Note

- If you do not insert the pin, the weight becomes the lightest.
- When you stick the pin in the top hole, approximately 400 g load is applied to the media.
  Every time you lower the pin position, approximately 700 g load will be added to the media.

[2]

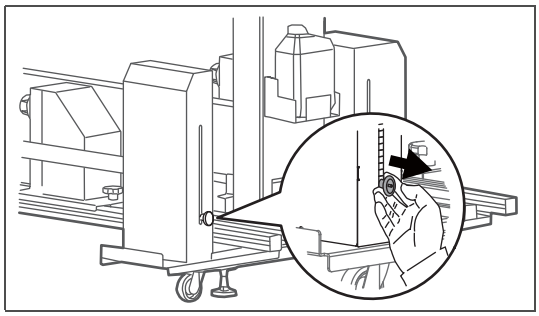

Pull the weight changing pin to check that it does not come off.

Note

If it is difficult to insert the pin in the weight changing hole, try holding up the tension bar slowly.

2. Adjusting the tension unit weight (when removing the pin)

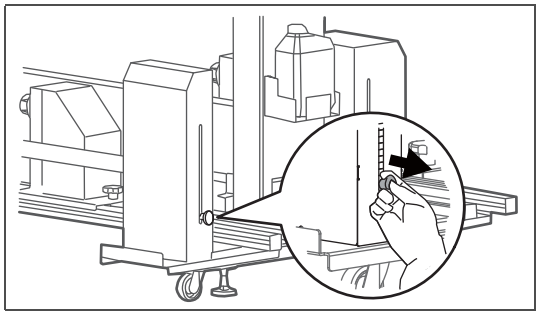

While pressing the button for the weight changing pin, remove the pin from the weight changing hole.

Adjusting the Rail

If the media is wrinkled when wound, the rail may not be parallel to the printer. Adjust the rail.

The adjusting method is the same for the front rail and rear rail. Adjust both the front and rear rails.

Adjusting the Rail (Adjusting the Path Length)

[1]

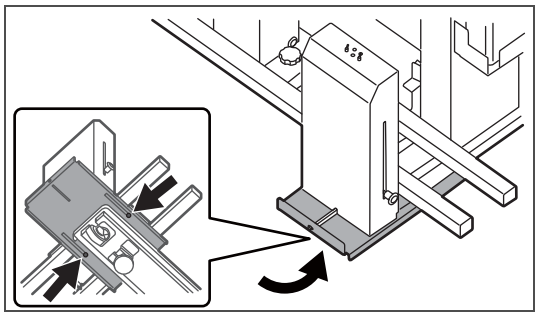

Use a hexagonal wrench (commercial product), and loosen two screws (hexagon socket head cap screw M4 × 12) on the Front tension unit.

Note

- The illustration used here is for the right side when you are facing the Take-up Unit.
- Also adjust the left side when you are facing the Take-up Unit.

[2]

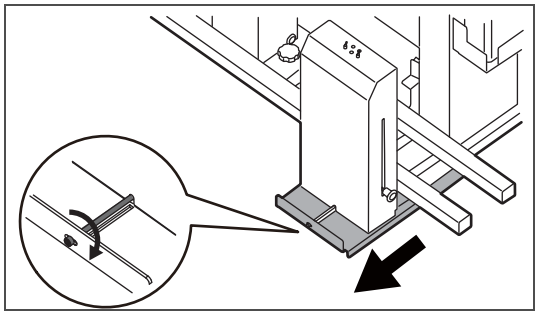

Rotate the rail adjustment screw clockwise to move the rail forward.

Note

- The rail does not move symmetrically. Only the rail on the side you rotate the screw moves forward.
- Also adjust the left side when you are facing the Take-up Unit.

[3]

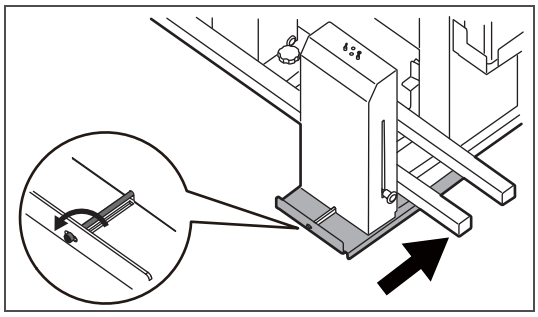

When moving the rail backward, rotate the rail adjusting screw anticlockwise, and then push the tension unit (or rail mounting plate) toward the back.

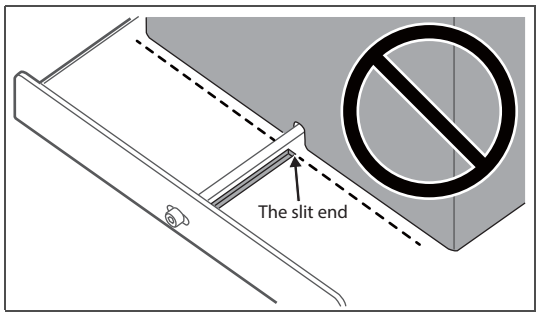

Make sure that the tension unit (or rail mounting plate) is placed more forward than the slit end.

[4]

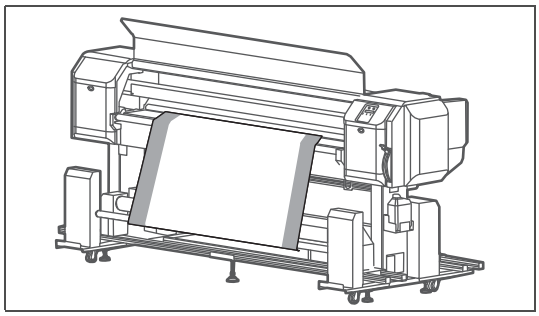

Rotate the rail adjusting screws on left and right sides, and adjust so that the lengths of the media edges are the same on both sides.

[5]

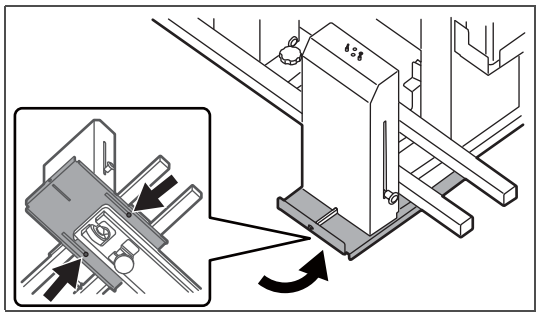

Tighten the screw that you loosened in step 1.

[6] Adjust the Feeding Unit in the same way.

Adjusting the Slack Detection Sensor

The angles of the slack detection sensor and sensor reflector may not be aligned after adjusting the rails.

In the following case, adjust the angle of the slack detection sensor:

- If only the green lamp of the slack detection sensor turns on when the take-up unit is turned on.
  (In a normal case, the orange and green lamps turn on at the same time.)

Note

If there are any objects between the slack detection sensor and sensor reflector, remove them and check the above item.

Adjusting the Angle of the Slack Detection Sensor

[1] Turn on the Take-up Unit.

[2]

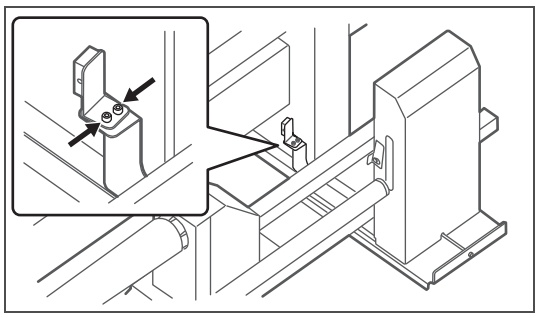

Use a hexagonal wrench (commercial product), and loosen two screws (hexagon socket head cap screw M4 × 8) of the slack detection sensor of the front tension unit (Home side).

[3]

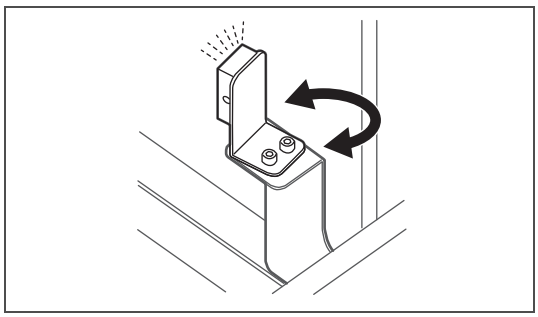

- Move the slack detection sensor sideways, and then adjust the angle.
- When the green and orange lamps light up on the slack detection sensor (light receiving) at the same time, the adjustment is complete.

[4] Tighten the screws that you loosened in step 2.

Powering ON / OFF

Printer

Turning the power ON

[1] Close the front cover.

[2]

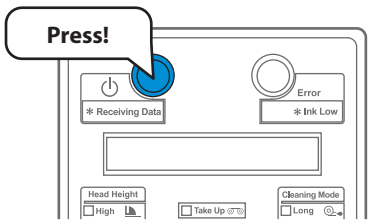

Press the power button to turn the power ON.

- The blue light becomes ON.
- This product starts its initialization operations.

Turning the power OFF

[1] Make sure printing is done.

[2]

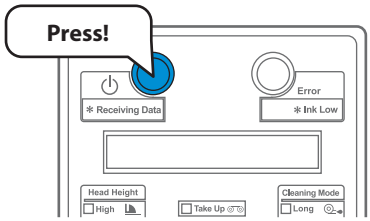

Press the power button to turn the power OFF.

- This product starts its powering off operations.
- The blue light becomes OFF.

Take-up System

Turning the power ON

[1]

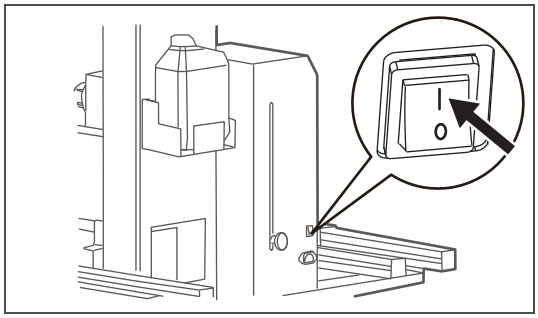

Press the power button to turn the power ON.

- The green light becomes ON.

Turning the power OFF

[1] Make sure printing is done.

[2]

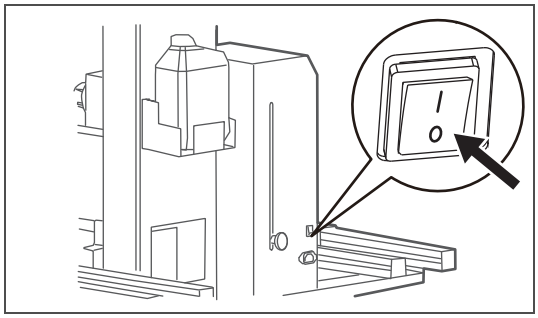

Press the power button to turn the power OFF.

- The green light becomes OFF.

Loading the media

There are two methods for loading the roll media to this printer.
Use the appropriate method depending on the media you are using.

Important!

Depending on the type of the media, we recommend that two or more persons set the media.

Tension take-up method

You can apply the load using the tension unit to take up the roll media.
Adjust to the appropriate load to avoid wrinkles or uneven printing.

"Adjusting the Weight" P. 31

This take-up method is suitable for most media.

Slack take-up method

You can take up the roll media without using the tension unit.
Use this method for the media that tend to have wrinkles from too much load when using the tension take-up method.
This is suitable for thin media, light media, elastic media, and so on.

Set the media to the Feeding Unit

[1]

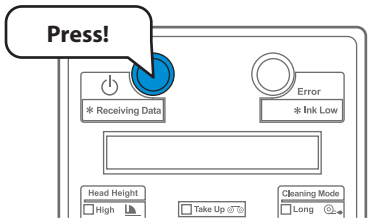

Turn the printer ON.

[2]

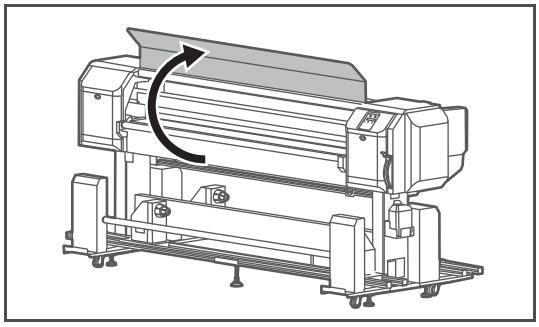

Open the front cover.

[3]

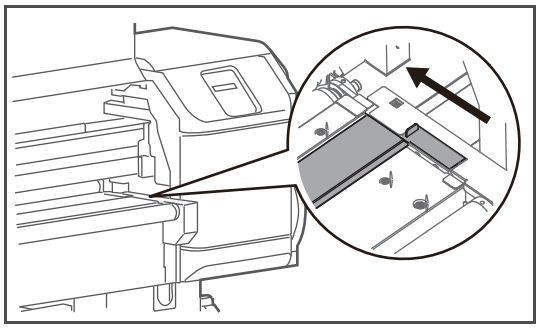

Close the ink gutter cover.

Note

If you do not close the ink gutter cover, the ink inside the gutter may adhere to the media while loading media.

[4]

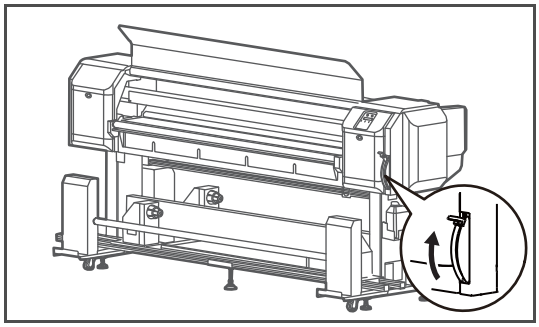

When the media setting lever is lowered, lift it up.

[5]

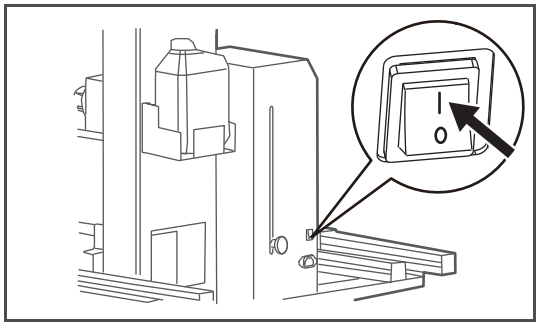

Turn the Take-up System ON.

[6]

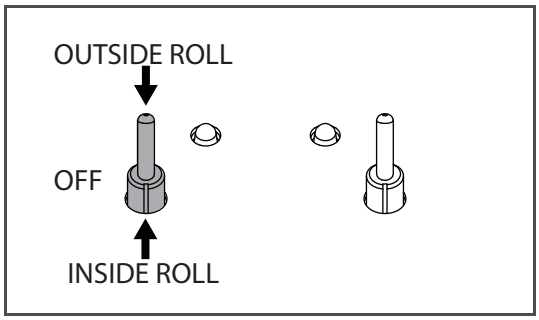

Switch the rear roll unit AUTO switch depending on the media you are setting.

- INSIDE ROLL: When setting the inside roll media.
- OUTSIDE ROLL: When setting the outside roll media.

Note

- Inside roll media: Media with the printable side on the inside.
- Outside roll media: Media with the printable side on the outside.

[7]

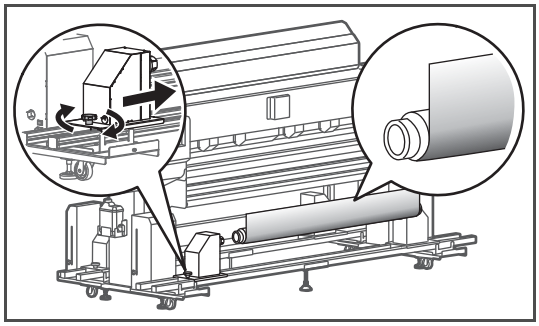

Load the roll media to the rear roll unit.

- Loosen the screw with a handle, and then attach the rear roll unit to the roll media.
- For the outside roll media, see the left illustration.

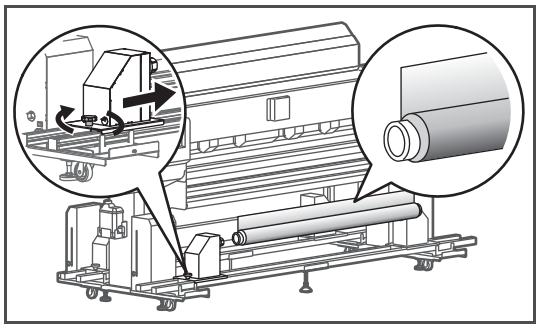

- For the inside roll media, see the left illustration.

[8]

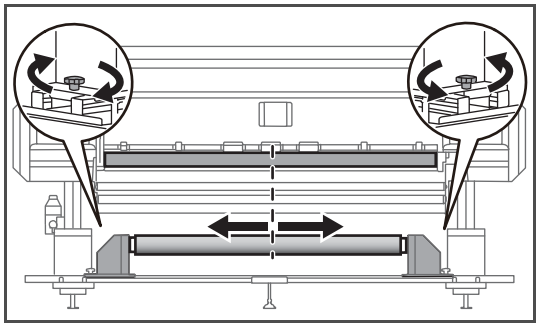

Loosen the screws with a handle on left and right sides, and then adjust the position of the roll media.

- Make sure that the center of the roll media and the center of the media feed slot are aligned.
- Once adjustment is complete, tighten and secure the screw with a handle.

Put the media through the Rear roller Assembly

[1]

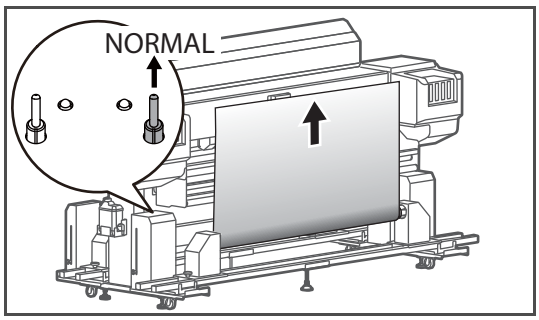

Move the MANUAL switch on the rear tension unit to the “NORMAL” side and pull the roll media out about 1.5 m.

[2]

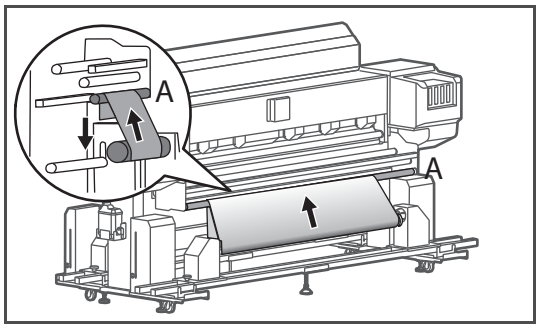

Put the roll media over the rear roller (A).

- For the outside roll media, see the left illustration.

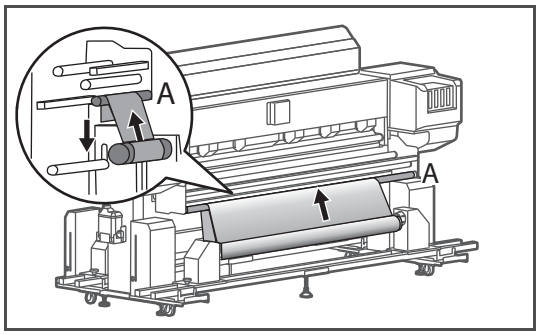

- For the inside roll media, see the left illustration.

[3]

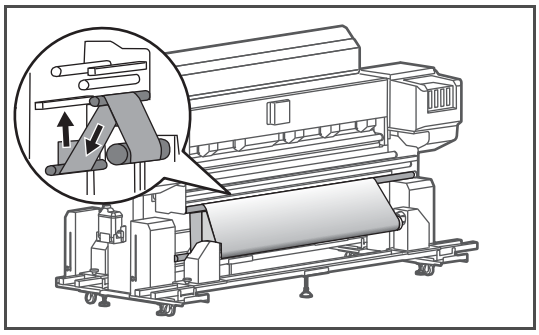

Put the roll media from the bottom to the top over the rear tension unit’s tension roller.

[4]

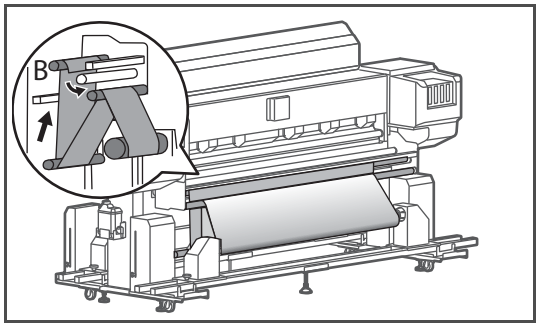

Put the roll media from the bottom to the top over the rear roller (B).

[5]

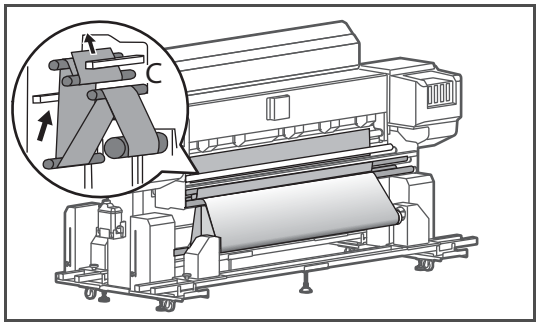

Put the roll media from the bottom to the top over the rear roller (C).

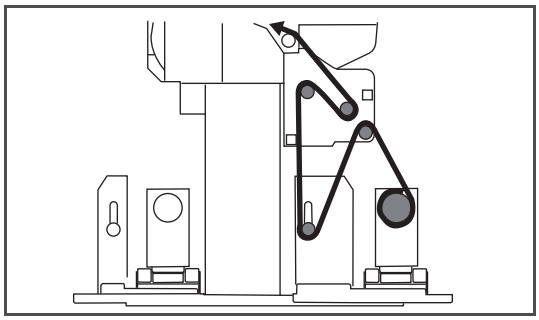

The media should be loaded to the roller as shown in the illustration when seen from the side.

- For the outside roll media

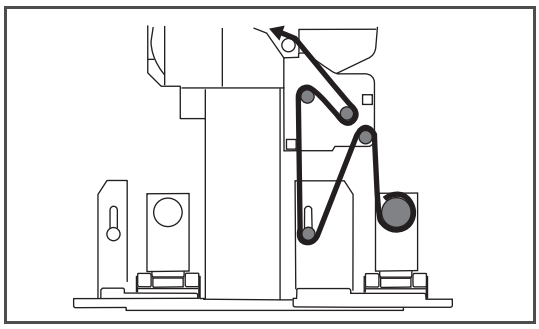

- For the inside roll media

Loading the media to the Take-up Unit

[1]

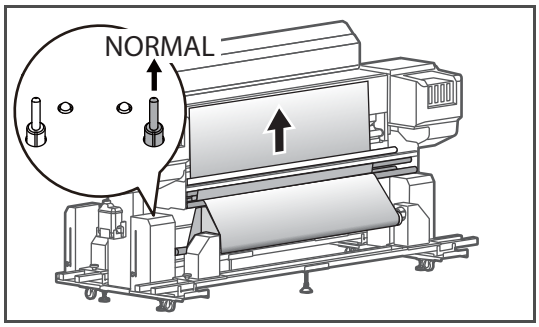

Move the MANUAL switch on the rear tension unit to the “NORMAL” side and pull the roll media out about 1.5 m.

[2]

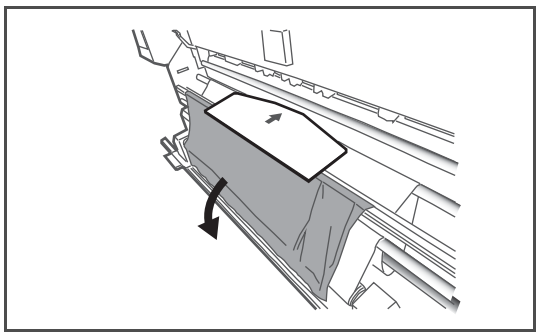

Let the media that you pulled out drop in front of you.
Place the media setting plate in the center of the media.

Note

The media setting plate is supplied with the printer.

Important!

If the thickness of the media that you wish to set is 1.0 mm or more, do not use the media setting plate.

[3]

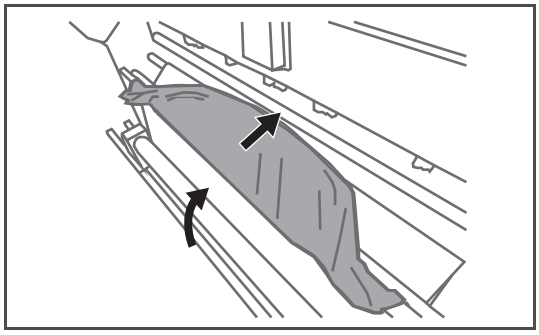

Wrap the roll media around the media setting plate and pass the media through the media feed slot.

Note

Insert the media into the media feed slot until the whole media setting plate is visible from the front side.

[4]

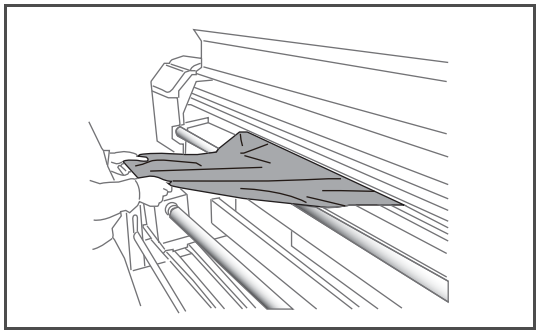

Pull out the media setting plate from the front side.
Pull the media out several times until it reaches a length of about 1 m.

Note

- If you continue pulling the media longer than a certain amount of time, the red lamp on the rear tension unit will light up.
  The rear tension unit will stop. Set the AUTO switch of the rear tension unit to “OFF” and select either “INSIDE ROLL” or “OUTSIDE ROLL” depending on the media rolling method.
  ☞ **"When the red lamp lights up"** P. 29
- After you pull it out, remove the board, and remove the wrinkles from the media.

[5]

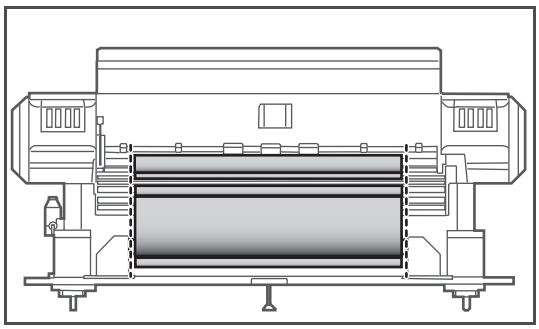

Adjust the position of the roller so that the edge of the media on the roller is straight when seen from behind.

Note

Adjust both edges of the media.

Using the tension take-up method to set the media

[1]

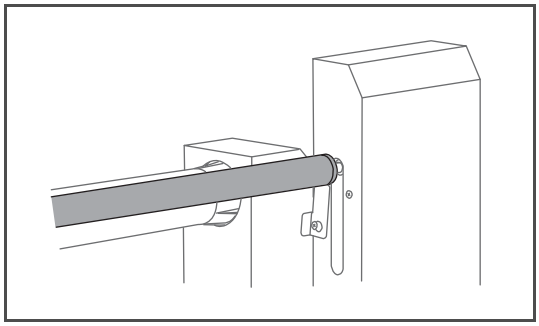

Lift the tension bar of the front tension unit manually to its highest position.

[2]

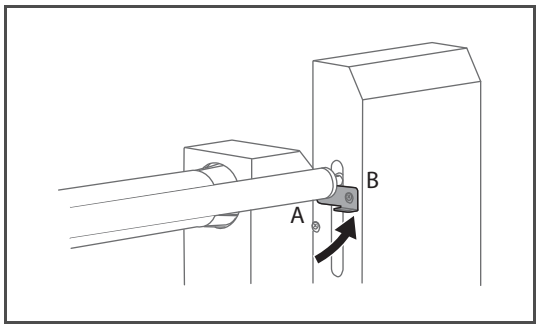

Unhook the auxiliary media setting plate from A and hook it to B.

- Mount the tension bar to the auxiliary media setting plate.

[3]

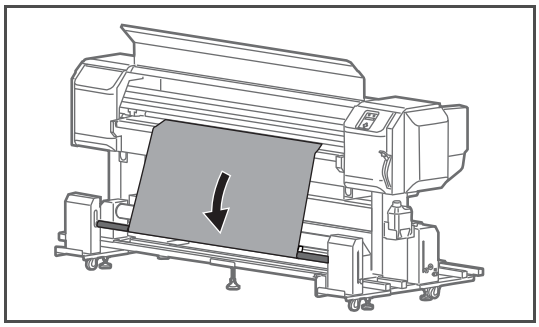

Put the roll media from the bottom to the top over the front tension unit's tension bar.

[4]

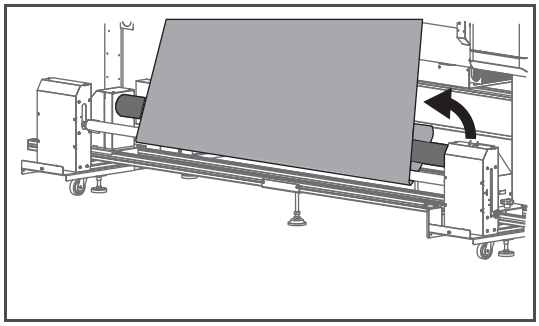

Secure the roll media to the media tube using double-sided tape.

Note

- For instructions on how to roll back the media during the setting operation, refer to the following page.

☞ **"Rolling back the media during the media setting operation" P. 28**

- After rolling back the media, adjust the position of the roller so that the edge of the media on the roller is straight when seen from behind.

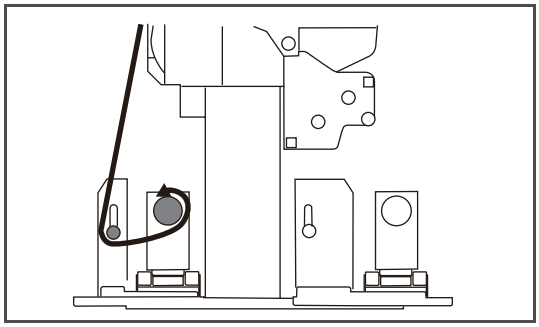

The media should be loaded to the roller as shown in the illustration when seen from the side.

- For the outside roll media

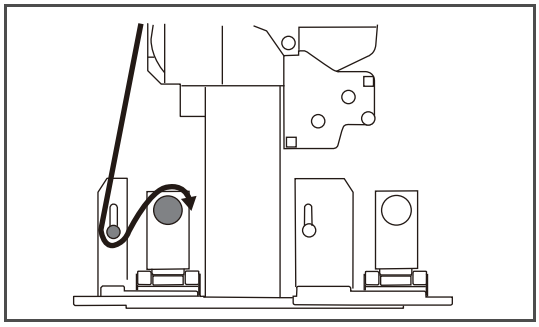

- For the inside roll media

[5]

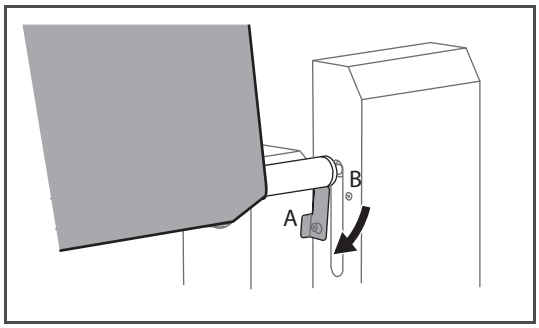

Unhook the auxiliary media setting plate from B and hook it to A.

Using the slack take-up method to set the media (Only outside roll media)

[1]

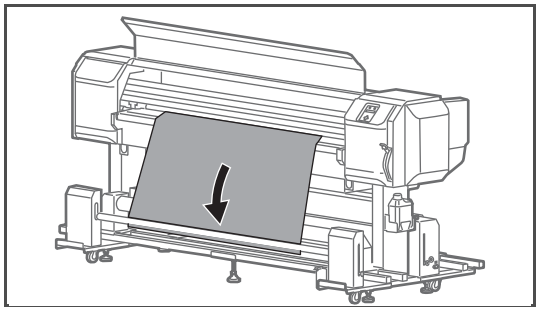

Drop the roll media between the tension bar of the front tension unit and the media tube.

[2]

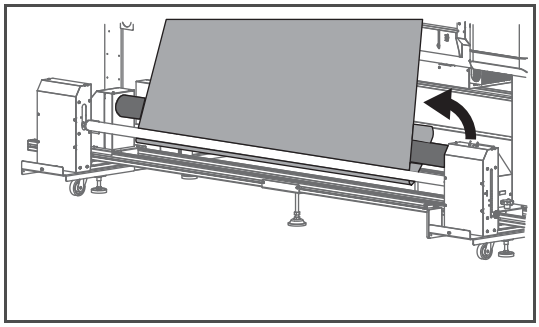

Secure the roll media to the media tube using double-sided tape.

Note

- For instructions on how to roll back the media during the setting operation, refer to the following page.

  ☞ **"Rolling back the media during the media setting operation" P. 28**

- After rolling back the media, adjust the position of the roller so that the edge of the media on the roller is straight when seen from behind.

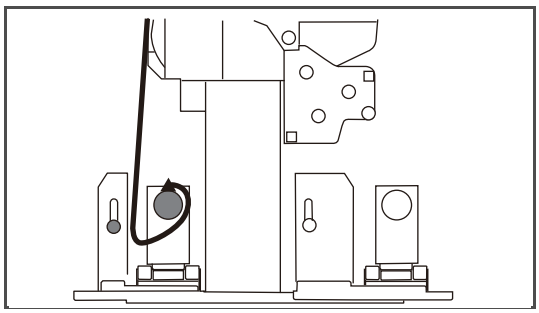

The media should be loaded to the roller as shown in the illustration when seen from the side.

After loading the media...

[1]

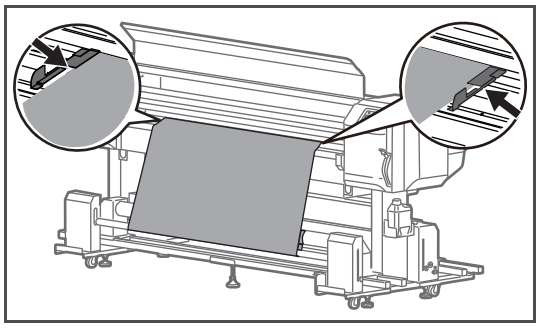

Set the media holder at both edges of the media.

Important!

With the default settings, the printing operation starts 5 mm from the edge of the media. To hold down the media, make sure that the part overlapping the media is less than 5 mm in length.

[2]

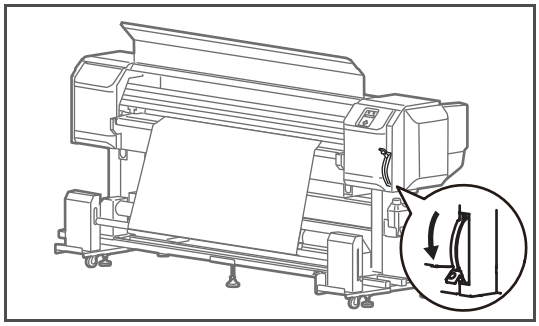

Lower the media setting lever.

[3]

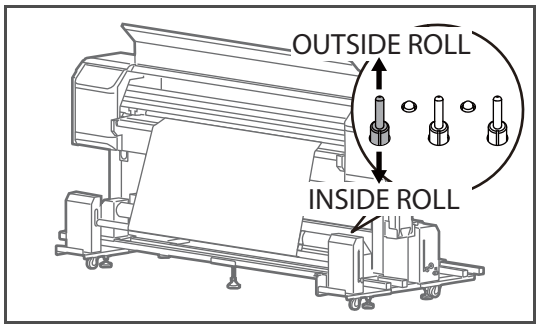

Switch the front tension unit AUTO switch depending on how you set the media.

- OUTSIDE ROLL: When setting the outside roll media
- INSIDE ROLL: When setting the inside roll media

[4]

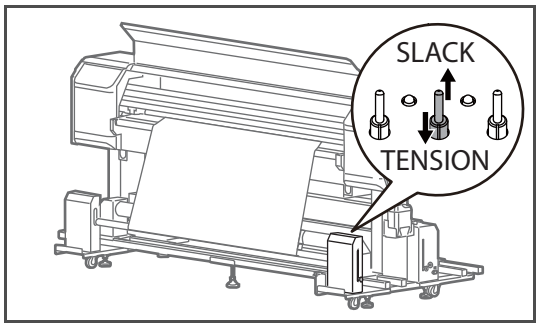

Switch the front tension unit OPERATION switch depending on how you set the media.

- SLACK: When using the slack take-up method
- TENSION: When using the tension take-up method

[5]

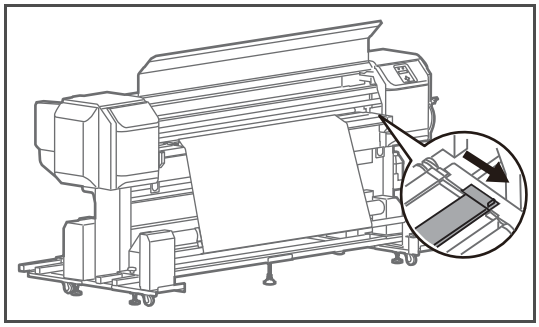

Open the ink gutter cover.

Note

If the ink gutter cover isn't completely open, you cannot print.

[6]

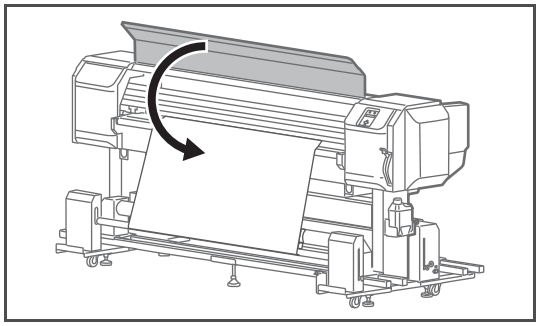

Close the front cover.

Using the printer operation panel

[1]

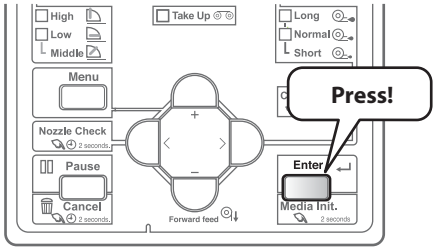

- "Init. Media=Enter 2s" is displayed on the operation panel.
- Press and hold the [Enter] key to 2 seconds or longer to execute media initialization.

[2]

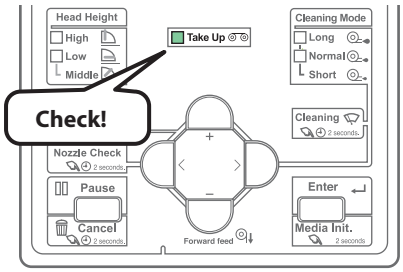

Make sure that the [Take-Up] lamp has lit up green.

Note

If the [Take-Up] lamp is not green, select "Take Up" in "Set 6 Output Mode".

☞ **"Set 6: Output Mode" P. 80**

[3]

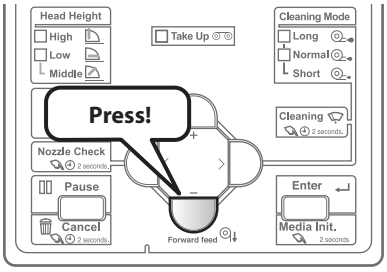

Press the [Forward] key on the operation panel, and take up about 2 to 3 rounds of the media to the media tube of the Take-up Unit.

Note

When "Media End/Take-up Error" is displayed on the operation panel, the media setting lever will be raised and lowered and the media detection operation will start.

Check the combination of the Operation switch and the AUTO switch of the front tension unit, and select the correct combination.

☞ **"When "Media End/Take-up Error" is displayed on the operation panel" P. 29**

Nozzle check and cleaning

Before starting everyday operation, please check the nozzle. If nozzle clog is found, conduct cleaning.

Nozzle check

Nozzle check steps

[1] Load the media for Nozzle check.

☞ "Loading the media" P. 38

[2]

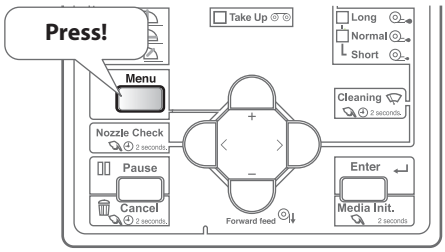

Press the [Menu] key.

[3]

Menu2 :	**Test Print >**

- Press the [-] key several times, to bring up the display on the left.
- Press the [>] key.

[4]

Test 1 :	**Nozzle check**

- Press the [Enter] key.
- Nozzle check patterns will be printed.

[5] Check the print result.

- If parts of lines are missing or faint, go to "Cleaning steps" P. 51.
- If all lines are clearly printed, you can start printing.

- 4-color setting

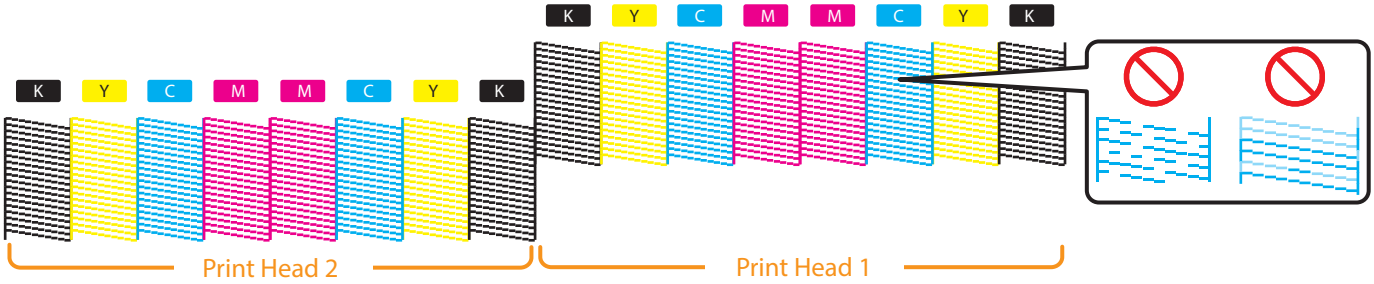

- 7-color setting

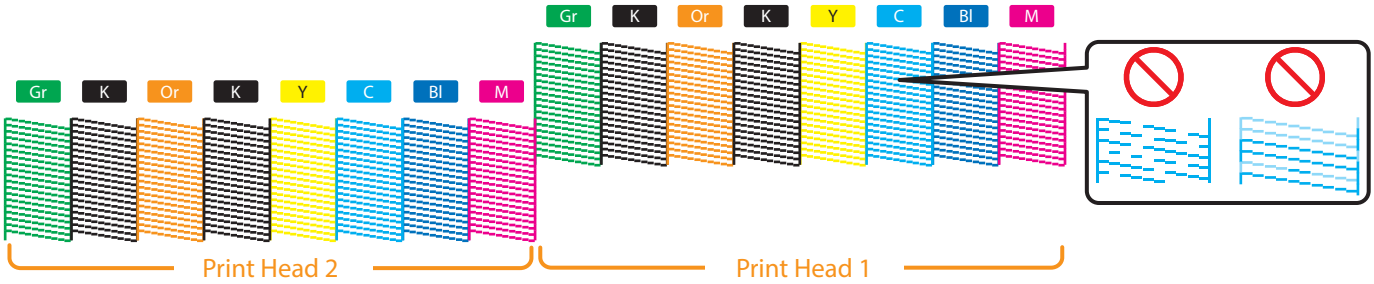

Note

The printer information (date and time printed, printer's serial number, firmware version) is printed on the nozzle check pattern.

Cleaning

Cleaning steps

[1]

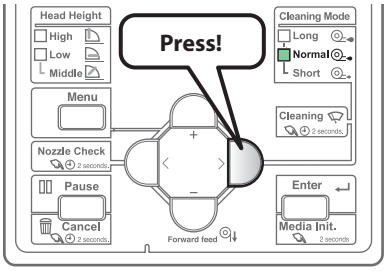

Press the [Cleaning] key, so that the “Normal” indicator (one of the “Cleaning Mode” indicators) lights steady.

- The cleaning mode will be set to “Normal”.

[2]

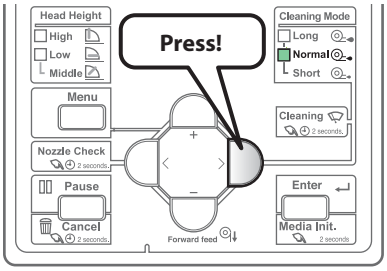

Press the [Cleaning] key for more than two seconds.

- Cleaning will start.

[3] Conduct a nozzle check, again.

☞ **"Nozzle check steps" P. 50**

- If there is still nozzle clogging, repeat normal cleaning.
  See **"Head cleaning" P. 108** regarding “Short”, “Long”, “LittleCharge” and “InitialCharge” cleaning.

Setting the Printing Precision

Before starting to print for the first time, adjust the printing precision.

Head adjustment

You can print out the adjustment pattern in this menu to check the misalignment of the print head, and then adjust it.

Adjustment methods for this printer are as follows.

Head Adj. 1 : **Standard**	Adjusts only the print mode used by the current user definition. When you have adjusted the print mode using Standard, make the resolution, pass count, and print direction of the print mode on the RIP side equal to those of the userdefined print mode.
Head Adj. 2 : **Custom**	Allows you to adjust also a print mode other than the print mode used by the current user definition. This method optimizes print quality even if the print mode on the RIP side is different from the user-defined mode.

Note

- Print quality may improve by head alignment in the following situations:
  Print quality is poor when using the uni-direction print mode ☞ **"Details of print mode"** P. 68
  Print quality does not improve even after performing print quality adjustment
- After you have performed head adjustment, make sure you perform print quality adjustment.
  There may be misalignment caused by head adjustment. ☞ **"Print quality adjustment"** P. 54
- When changing the print mode after performing standard head adjustment, make sure you adjust print head.
- Since all print modes are adjusted at once after performing Custom head adjustment, head adjustment is not required even after changing the print mode.
- When specifying a print mode for RIP software, etc, that is different from the mode set in the user type setting, perform Custom head adjustment and check all patterns (A to F), and then adjust any patterns that are misaligned beforehand.

Head adjustment steps

[1] Turn the printer and the Take-up System ON and load the media.

☞ "Loading the media" P. 38

[2]

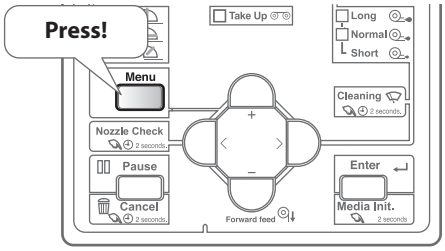

Press the [Menu] key.

[3]

Menu2 :	**Test Print >**

- Press the [-] key several times, to bring up the display on the left.
- Press the [>] key.

[4]

Test 5 :	**HeadAdjust >**

- Press the [-] key several times, to bring up the display on the left.
- Press the [>] key.

[5]

Head Adj. 1 :	**Standard**
Head Adj. 2 :	**Custom**

- Select the adjustment method with the [+]/[-] key.
- Press the [Enter] key.

[6] Starts printing.

- The confirmation pattern will be printed.

[7] Follow the steps below and adjust the head.

☞ "Steps" P. 94

Print quality adjustment

It is used for optimizing the quality of image prints.

Adjustment methods for this printer are as follows.

Adj. Print 1 :	**Standard**

Adjusts only the print mode used by the current user definition.
When you have adjusted the print mode using Standard, make the resolution, pass count, and print direction of the print mode on the RIP side equal to those of the userdefined print mode.

Adj. Print 2 :	**Custom**

Allows you to adjust also a print mode other than the print mode used by the current user definition.
This method optimizes print quality even if the print mode on the RIP side is different from the user-defined mode.

Note

- When newly setting or changing the user type setting after adjusting Standard adjust print, make sure to adjust print.
- When changing the print mode after performing standard head adjustment, make sure you adjust print head.
- Since all print modes are adjusted at once after performing Custom adjust print, adjust print is not required even after changing the print mode. When specifying a print mode for RIP software, etc, that is different from the mode set in the usertype setting, perform Custom head adjustment and check all patterns (A to F), and then adjust any patterns that are misaligned beforehand.
- Print quality may improve by head adjustment in the following situations:
  For adjustment procedure, see ☞ **"Head adjustment" P. 52**

  Print quality is poor when using the uni-direction print mode. ☞ **"Details of print mode" P. 68**
  Print quality does not improve even after performing print quality adjustment

- After you have performed head alignment, make sure you perform print quality adjustment.
  There may be misalignment caused by head alignment.

Print quality adjustment steps

[1] Turn the printer and the Take-up Unit ON and load the media.

☞ "Loading the media" P. 38

[2]

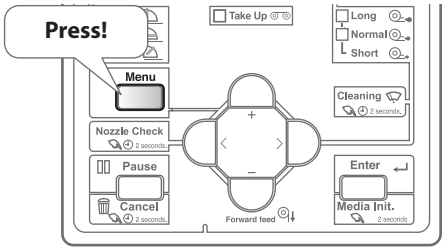

Press the [Menu] key.

[3]

Menu1 :	**Setup >**

- Press the [>] key.

[4]

Set 1 :	**User Type**

- Press the [Enter] key.

[5]

User :	**Type 1**

- Use the [+]/[-] key to select a user type.
- Press the [Enter] key.

[6]

****> 2 :**	**Adjust Print >**

- Press the [-] key several times, to bring up the display on the left.
- Press the [>] key.

[7]

Thickness :	**170 µm**

- Enter the media thickness.
- Press the [Enter] key.

[8]

Adj. Print 1 :	**Standard**
Adj. Print 2 :	**Custom**

- Select the adjustment method with the [+]/[-] key.
- Press the [Enter] key.

Note

- In Standard print quality adjustment and Custom print quality adjustment, the names in the available patterns are different.
  For details, refer to the page below.
  ☞ "Adj. Print 1: Standard" P. 69
  ☞ "Adj. Print 2: Custom" P. 70
- For a pre-adjustment check, select “Confirm Ptn.”.

Check the print results in “Confirm Ptn.”.

- To adjust large misalignment, select “Rough Pattern”.
- To adjust small misalignment, select “Fine Pattern”.

[9] Follow the steps below and adjust the print quality.

☞ "Steps" P. 73

Media feed adjustment

This adjustment is necessary when:

- you use this product for the first time.
- you change the type of the media.

In other cases, proceed to "Nozzle check" P. 50.
For this adjustment, you need a ruler. Use a commercially available ruler.

Note

If you encounter any of the following problems with the print results, you may be able to solve them by adjusting the media feed.

- Printed images overlap.
- White lines are printed over images.

Media feed adjustment steps

[1] Load the media.

"Loading the media" P. 38

[2]

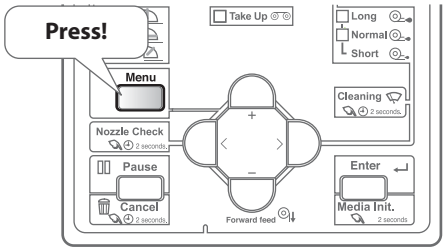

Press the [Menu] key.

[3]

Menu1 :	**Setup >**

- Press the [>] key.

[4]

Set 1 :	**User Type**

- Press the [Enter] key.

[5]

User :	**Type 1**

- Use the [+]/[-] keys to select a user type.
- Press the [Enter] key.

[6]

**> 3 :	PF Adjust >

- Press the [-] key several times, to bring up the display on the left.
- Press the [>] key.

[7]

PF 1 :	Initial Print
PF 2 :	Initial Change
PF 3 :	Comfirm Print
PF 4 :	Micro Print
PF 5 :	Micro Change

- Use the [+]/[-] key to select a menu.
- Press the [Enter] key.

[8] Follow the steps below and adjust the print quality.

☞ "Steps" P. 73

What you can do during printing

Pausing/Restarting printing

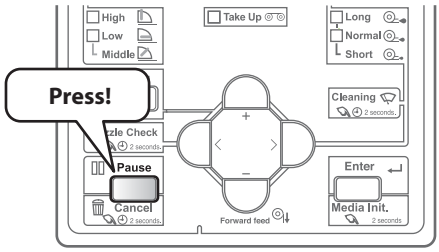

To halt printing, press the [Cancel] key.

- The printing pauses.
- To resume printing, press the [Enter] key.

Note

- In this operation, printing data sent to the product are not deleted.
- Please see the followings when canceling printing and deleting data.

"Canceling printing" P. 58

Important!

Mutoh cannot guarantee the print quality when you resume the print.

Canceling printing

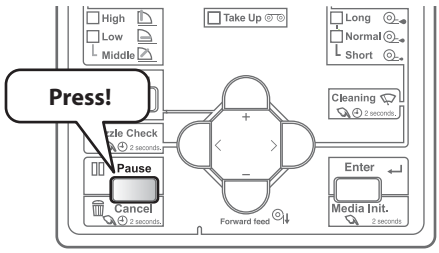

Press and hold the operation key on the operation panel for 2 seconds or more during printing.

- The printing is canceled (it cannot be restarted).
- The printing data sent to the product are deleted.

Note

You can alternatively do this via the printer driver or the MSM's remote panel.

What you can do on the operation panel during printing

[1]

Receiving
Printing
Converting

Press the [Menu] key while any of the messages on the left is displayed.

[2]

Menu 1 :	**PF Micro Adj.**
Menu 2 :	**Backup**
Menu 3 :	**Job Status**

Use the [+] / [-] key to select a menu item.

"Menu 1: PF Micro Adjustment" P. 59
"Menu 2: Backup" P. 59
"Menu 3: Job Status" P. 60

Menu 1: PF Micro Adjustment

With this menu item, you can alter the micro-adjustment value for the feed correction. The alteration will be valid for the current printing only.

- See the following related sections of Panel Setting Menus (Chapter 2 below):

☞ "** > 3: PF Adjust" P. 73

[1]

Menu 1 :	**PF Micro Adj.**

Press the [Enter] key.

[2]

Micro :	**5.00 %**

- Use the [+] / [-] key to change the setting value.
- Press the [Enter] key to set the changed value.

Note

- The changed value set with this menu item will become invalid when the printing ends.
- To have the change reflected in the currently selected User Type, save it using "Menu 2: Backup".

Menu 2: Backup

With this menu item, you can have a change that you made via "Menu1: PF Micro Adj." reflected in the currently selected User Type.

[1]

Menu 2 :	**Backup**

Press the [Enter] key.

[2]

Update Parameter?

Press the [Enter] key.

*** Parameter Updating ***

The setting value will be saved.

Menu 3: Job Status

This menu item displays data on the job being printed.

- See the following related sections of Panel Setting Menus (Chapter 2 below):
  ☞ "Menu 8: Job Status" P. 100

[1]

Menu 3 :	**Job Status**

Press the [Enter] key.

[2]

ToDoLength :	**XXX.Xm**
Done :	**XXX.Xm**
Remain :	**XXX.Xm**
Remain Time :	**Xmin**

Use the [+] / [-] key to select a menu item.

- ToDoLength: display this to check the total length (media feed direction) of the job being printed.
- Done: display this to check how much of the current job has been printed.
- Remain: display this to check how much of the current job remains to be printed.
- Remain time: displays the time remaining to complete the print job.

Note

- The values displayed by this function are approximate. They are not guaranteed to be rigorously accurate.
- If the print job data contains no length information, “0” will be displayed for all these items.

Chapter 2 Advanced Operations

Introduction 63

Operating the keys to use the menus 63
Panel setup menu 64

Menu 1: Setup 67

Set 1: User Type 67
Set 2: Spitting 78
Set 3: Side Margin 79
Set 4: Media Initial 79
Set 5: Media Width 80
Set 6: Output Mode 80
Set 7: Origin 81
Set 8: Head Travel 81
Set 9: Multi Strike 82
Set 10: Strike Wait 82
Set 11: Slant Check 82
Set 12: Auto Cleaning 83
Set 13: Ink Status 84
Set 14: Media Length 84
Set 15: Exhaust Fan 85
Set 16: Longstore 85
Set 17: CR Maintenance 85
Set 18: Initialization 86
Set 19: Life Times 86
Set 20: IP Address 87
Set 21: Subnet Mask 87
Set 22: Gateway 87
Set 23: Header Dump 88
Set 24: Single Head 88
Set 25: Start Feed 89
Set 26: Alert Buzzer 89
Set 27: PF Feed 90
Set 28: Temporary 90

Menu 2: Test Print 91

Test 1: Nozzle Check 91
Test 2: Mode Print 91
Test 3: Setup List 92
Test 4: Palette 92
Test 5: Head Adjust 93

Menu 3: Cleaning 95

Menu 4: Menu Option 96

Menu 5: Version 97

Menu 6: Sleep Mode.....97

Sleep Mode 1: Set Timer 97
Sleep Mode 2: Start 97

Menu 7: Display 98

Display 1: Language 98
Display 2: Temperature 98
Display 3: Length 98
Display 4: Remain Ink 99

Menu 8: Job Status 100

Introduction

Using the panel setting menus, configure various kinds of settings for the printer.

Operating the keys to use the menus

[1]

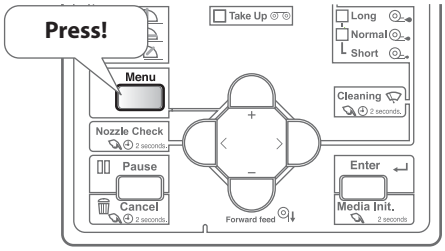

To access the panel setting menus, press the [Menu] key.

Note

You cannot access the panel setting menus while printing or receiving data (the power button is flashing).

[2]

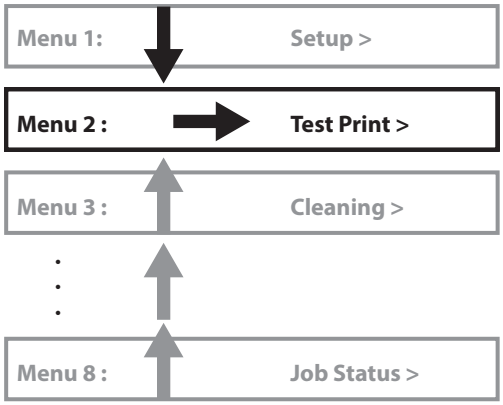

Use the [+] / [-] key to scroll through the menus.

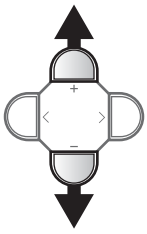

Press the [>] key to access the menu you are on.

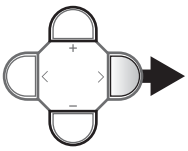

[3]

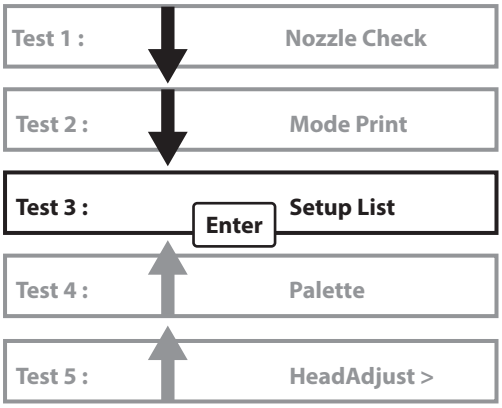

Use the [+] / [-] key to select submenus, enter numeric values and so forth.

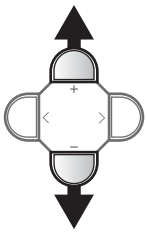

Press the [Enter] key to set/execute.

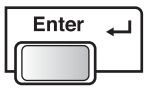

Use the [Cancel] key to return to the menu/submenu.
(In the case shown on the left, pressing [Cancel] key will return to "Menu2: Test Print>".)

Panel setup menu

Menu 1: Setup

Menu 1:	Setup >

Various settings of the printer are configured.

Submenus

Set 1:	User Type	Set 1: User Type
Set 2:	Spitting	Set 2: Spitting
Set 3:	Side Margin	Set 3: Side Margin
Set 4:	Media Initial	Set 4: Media Initial
Set 5:	Media Width	Set 5: Media Width
Set 6:	Output Mode	Set 6: Output Mode
Set 7:	Origin	Set 7: Origin
Set 8:	Head Travel	Set 8: Head Travel
Set 9:	Multi Strike	Set 9: Multi Strike
Set 10:	Strike Wait	Set 10: Strike Wait
Set 11:	Slant Check	Set 11: Slant Check
Set 12:	Auto Cleaning	Set 12: Auto Cleaning
Set 13:	InkStatus	Set 13: Ink Status
Set 14:	Media Length	Set 14: Media Length
Set 15:	Exhaust Fan	Set 15: Exhaust Fan
Set 16:	Longstore	Set 16: Longstore
Set 17:	CR Maintenance	Set 17: CR Maintenance
Set 18:	Initialization	Set 18: Initialization
Set 19:	Life Times	Set 19: Life Times
Set 20:	IP Address	Set 20: IP Address
Set 21:	Subnet Mask	Set 21: Subnet Mask
Set 22:	Gateway	Set 22: Gateway

Menu 1: Setup

Set 23:	Header Dump	Set 23: Header Dump
Set 24:	Single Head	Set 24: Single Head
Set 25:	Start Feed	Set 25: Start Feed
Set 26:	Alert Buzzer	Set 26: Alert Buzzer
Set 27:	PF Feed	Set 27: PF Feed
Set 28:	Temporary	Set 28: Temporary

Menu 2: Test Print

Menu 2:	Test Print >

Performs nozzle check of the print head and setup list.

Submenus

Test 1:	Nozzle Check	Test 1: Nozzle Check
Test 2:	Mode Print	Test 2: Mode Print
Test 3:	Setup List	Test 3: Setup List
Test 4:	Palette	Test 4: Palette
Test 5:	HeadAdjust >	Test 5: Head Adjust

Menu 3: Cleaning

Menu 3:	Cleaning >

Cleans the print head and performs the initial ink charging.

Submenus

Time :	Short	Menu 3: Cleaning
Time :	Normal	
Time :	Long	
Time :	Little Charge	
Time :	Initial Charge	

Menu 4: Menu Option

Menu 4:	Menu Option >

Displays or hides the Setup menu.

Menu 4: Menu Option

Menu 5: Version

Menu 5:	**Version >**

Displays the versions of the firmware.

Submenus

Version:	**X.XX**

Menu 6: Sleep Mode

Menu 6:	**Sleep Mode >**

Configures or activates the sleep mode.

Submenus

SleepMode 1 :	**SetTimer**	☞ **Sleep Mode 1: Set Timer**
SleepMode 2 :	**Start**	☞ **Sleep Mode 2: Start**

Menu 7: Display

Menu 7:	**Display >**

Configures the display language and the way units and the remaining ink are displayed.

Submenus

Display 1:	**Language**	☞ **Display 1: Language**
Display 2:	**Temperature**	☞ **Display 2: Temperature**
Display 3:	**Length**	☞ **Display 3: Length**
Display 4:	**Remain Ink**	☞ **Display 4: Remain Ink**

Menu 8: Job Status

Menu 8:	**Job Status >**

Displays various information of previous print.

Submenus

Job Status:	**Completed**	☞ **Menu 8: Job Status**
ToDoLength :	**XXX.X m**	
Done :	**XXX.X m**	
Remain :	**XXX.X m**	

Menu 1: Setup

Set 1: User Type

The User Type is one of user-settings to set media types and printing conditions for printing.

Set 1:	User Type

You can have up to 15 groups of User Type, labeled “Type1” to “Type15”. When you select a User Type group (“Type”) and press the [Enter] key, that definition group will be set for the printer. Also, a submenu will be displayed.

Setting values

User :	Type 1

Select a “Type” number, from “Type1” to “Type15”.

Important!

When you change to another User Type, all the settings that can be set via the User Type will be changed.

- **The settings that can be set via the User Type include “Print Mode”, “Effect”, the adjustment value for “Adjust Print”, the adjustment value for “PF Adjust”, and “Thickness”.**

When using the printer for the first time or when changing the media, configure the items for the User Type.

User :	Type 1

Making media settings.

Submenus

**> 1 :	Print Mode	**>1: Print Mode
**> 2 :	Adjust Print >	**>2: Adjust Print>
**> 3 :	PF Adjust >	** > 3: PF Adjust
**> 4 :	Thickness	** > 4: Thickness
**> 5 :	UserCopy	** > 5: User Copy

**>1: Print Mode

* *> 1 :	Print Mode

Making settings for print mode

- Pressing the [>] key while a mode is displayed will bring up detailed information on that mode (resolution, number of passes, print direction), which will be displayed for as long as the key is held down.
- After setting the print mode, go on to setting of effect.

Setting values	
Mode : Quality X - >	Sets up to perform high quality printing. There are four patterns: Quality 1 to Quality 4.
Mode : Graphics X - >	Sets up to perform standard printing. There are two patterns: Graphics 1 and Graphics 2. Graphics 2 is the initial setting.
Mode : Banner X - >	Sets up to perform high-speed printing. There are four patterns: Banner 1 to Banner 4.

Details of print mode

Print Mode	Resolution	Pass (4-color setting)	Pass (7-color setting)	Direction	Initial values for effect
Quality 1	1440 × 1440	16 pass	32 pass	Uni (unidirectional)	Fine&Fog
Quality 2	1440 × 1440	16 pass	32 pass	Bi (bidirectional)	Fine&Fog
Quality 3	720 × 1440	8 pass	16 pass	Uni (unidirectional)	Fine&Fog
Quality 4	720 × 1440	8 pass	16 pass	Bi (bidirectional)	Fine&Fog
Graphics 1	720 × 1080	6 pass	12 pass	Uni (unidirectional)	Fine&Fog
Graphics 2	720 × 1080	6 pass	12 pass	Bi (bidirectional)	Fine&Fog
Banner 1	720 × 720	4 pass	8 pass	Uni (unidirectional)	Fine&Fog
Banner 2	720 × 720	4 pass	8 pass	Bi (bidirectional)	Fine&Fog
Banner 3	360 × 720	2 pass	4 pass	Uni (unidirectional)	None
Banner 4	360 × 720	2 pass	4 pass	Bi (bidirectional)	None

Effect

Mode :	Quality 1 - >

Sets up the Effect menu.
Set up this menu when you want to improve print quality by adjusting the set print mode.

Setting values	
Effect : None	The Effect function is not used.
Effect : Wave	The printing joint will be the wave form.
Effect : Fine & Fuzz	The printing joint will shade off as the wave form.
Effect : Fine & Fog	The printing joint will shade off. This is the initially set value.
Effect : A - S. Fine & Wave	Performs “Wave” printing using the left side of the of Print head.
Effect : B - S. Fine & Wave	Performs “Wave” printing using the right side of the of Print head.

**>2: Adjust Print>

* *> 2 :	Adjust Print >

Sets up when adjusting the printer for the optimum quality of image print.
Before adjusting this setting, enter the thickness of the media.

☞ "Confirm pattern" P. 71
☞ "Rough adjustment pattern" P. 72
☞ "Fine adjustment pattern" P. 72

Submenus	
Adj. Print 1 : Standard	Adjusts only the print mode in the user type setting which is currently set.
Adj. Print 2 : Custom	Adjusts the print modes other than the mode in the user type setting which is currently set.

Adj. Print 1: Standard

Adj. Print 1 :	Standard

Adjusts only the print mode in the user type setting which is currently set.

☞ "Confirm pattern" P. 71
☞ "Rough adjustment pattern" P. 72
☞ "Fine adjustment pattern" P. 72

Submenus	
Adj. 1 : Confirm Ptn.	Print the test pattern for the alignment. Check before adjusting.
Adj. 2 : Rough Pattern	Perform this when the degree of misalignment is large. Print Adjust pattern and enter the set value.
Adj. 3 : Fine Pattern	Perform this when the degree of misalignment is small. Print Adjust pattern and enter the set value.

Adj. Print 2: Custom

Adj. Print 2 :	Custom

Perform adjustment for all patterns (A to F).

☞ "Confirm pattern" P. 71
☞ "Rough adjustment pattern" P. 72
☞ "Fine adjustment pattern" P. 72

Submenus	
Adj. 1 : Confirm Ptn.	The test patterns of A to F will be printed for Adjust print. Check before adjusting.
Adj. 2 : Rough Ptn. ALL	For printing all rough adjustment patterns from A to X.
Adj. 3 : Rough Pattern A ・ ・ ・ Adj. 8 : Rough Pattern F	For printing an adjust pattern selected from A to F.
Adj. 9 : Fine Ptn. ALL	For printing all fine adjustment patterns from A to X.
Adj. 10 : Fine Pattern A ・ ・ ・ Adj. 15 : Fine Pattern F	For printing an adjust pattern selected from A to F.

Adjustment patterns for each print mode

Print mode	Print mode specifications	Adjustment pattern
Quality 1	1440 x 1440, 16 pass / 32 pass, Uni	B
Quality 2	1440 x 1440, 16 pass / 32 pass, Bi	
Quality 3	720 x 1440, 8 pass / 16 pass, Uni	
Quality 4	720 x 1440, 8 pass / 16 pass, Bi	
Graphics 1	720 x 1080, 6 pass / 12 pass, Uni	
Graphics 2	720 x 1080, 6 pass / 12 pass, Bi	
Banner 1	720 x 720, 4 pass / 8 pass, Uni	A
Banner 2	720 x 720, 4 pass / 8 pass, Bi	
Banner 3	360 x 720, 2 pass / 4 pass, Uni	
Banner 4	360 x 720, 2 pass / 4 pass, Bi	

Steps

1. Print a confirm pattern and check it for printing errors.
2. Print “Rough adjustment pattern” and look for a place that is properly adjusted in the results of print head 1.
   - If you selected “Adj. Print 2: Custom”, select “ALL” or “A” to “F”.
   - The number printed under the pattern without alignment errors is the adjustment value.
3. Enter the correction values.
4. Follow the same procedure to adjust print head 2.
5. Print “Fine adjustment pattern” and look for a place that is properly adjusted in the results of print head 1.
   - If you selected “Adj. Print 2: Custom”, select “ALL” or “A” to “F”.
   - The number printed under the pattern without alignment errors is the adjustment value.
6. Enter the correction values.
7. Follow the same procedure to adjust print head 2.

Confirm pattern

- Press the [Enter] key to carry out printing.
- Check the print results. If there are shifting problems, proceed to rough adjustment pattern printing.
- In the picture below, there are misalignments.

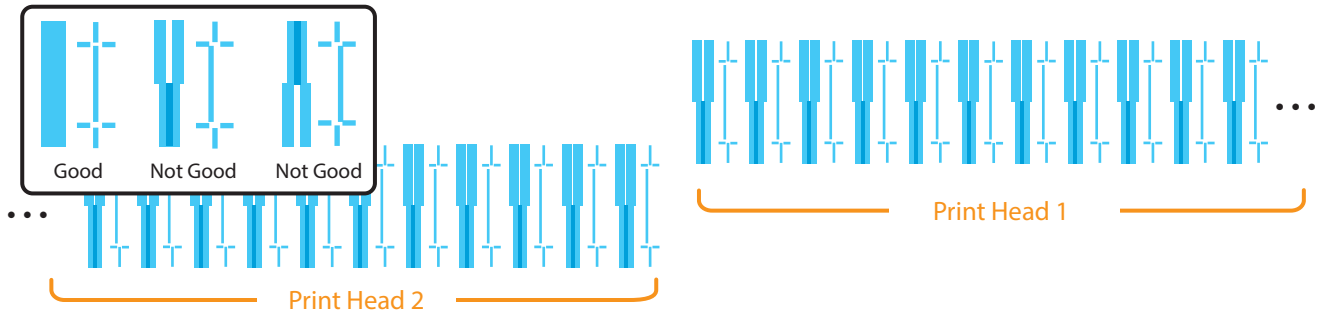

Note

Because this printer has 2 Print heads, 2 rows of confirmation pattern will be printed.

Rough adjustment pattern

- Press the [Enter] key to carry out printing. For the Rough adjustment pattern, the same patterns will be printed on both sides and center of the media.
- For Head 1, check the print results on both sides and center of the media and select the number that looks most aligned between 1 and 21.
- Pattern names such as “Pattern B1: 11” are shown on the display. Use the [+]/[-] key to enter the number of the best-adjusted pattern, and press the [Enter] key.
- In the case of the picture below, enter “12”, so that the display reads “Pattern B1: 12”.
- Follow the same procedure to adjust print head 2.

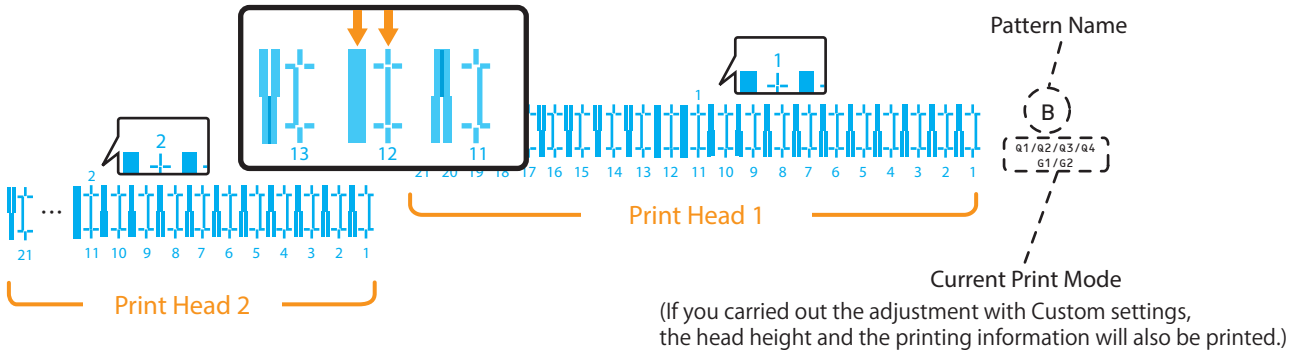

Fine adjustment pattern

- Press the [Enter] key to carry out printing. For the Fine adjustment pattern, the same patterns will be printed repeatedly on both sides and center of the media.
- For Head 1, check the print results on both sides and center of the media and select the number that looks most aligned between 1 and 7.
- Pattern names such as “Pattern B1: 4” are shown on the display. Use the [+]/[-] key to enter the number of the best-adjusted pattern, and press the [Enter] key.
- In the case of the picture below, enter “6”, so that the display reads “Pattern B1: 6”.
- Follow the same procedure to adjust print head 2.

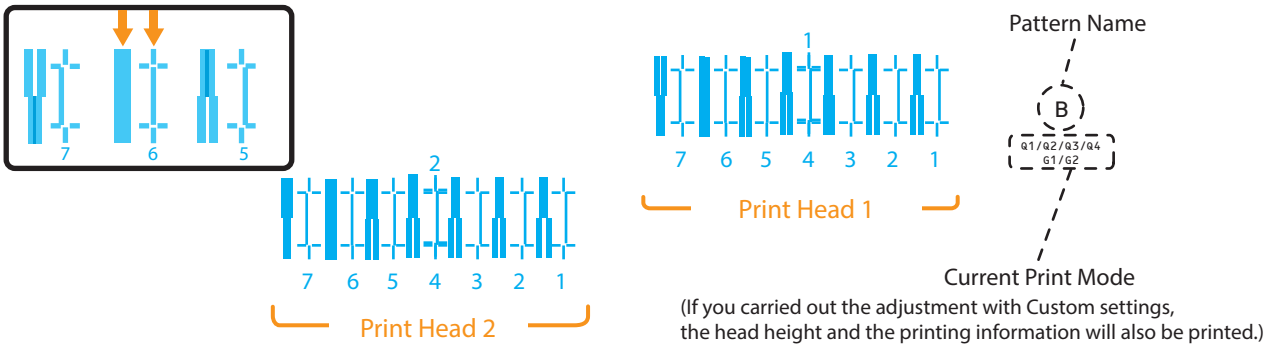

** > 3: PF Adjust

* *> 3 :	PF Adjust >

Sets up various settings on the Media feed correction.
When the following defects are found in print results, they may improve by conducting a media feed correction.

- Images are overlapping.
- There are white lines in images.

Submenus

PF1 :	Initial Print	"PF1: Initial Print" P. 74
PF2 :	Initial Change	"PF2: Initial Change" P. 75
PF3 :	Confirm Print	"PF3: Confirm Print" P. 75
PF4 :	Micro Print	"PF4: Micro Print" P. 76
PF5 :	Micro Change	"PF5: Micro Change" P. 76

Steps

1. Select "PF1: Initial Print".

- "Feed Length: 250 mm" is displayed on Operation panel.

2. After the initial adjustment printing, cut the media.

- Measure the distance between the " " in the initial adjustment print using a ruler.

3. Refer to Chapter 1 "Media feed adjustment steps" P. 56 and select "PF2: Initial Change" on the operation panel.

4. Press the [+] key or [-] key on Operation panel and enter the measured value in Step 2.

- Press the [Enter] key to save the initial adjustment value.

5. Press the [+] key or [-] key on Operation panel to select "PF3: Confirm Print".

- "Feed Length: 250 mm" is displayed on Operation panel.

6. After the confirmation adjustment printing, cut the media.

- Measure the distance between the " " in the confirmation adjustment print using a ruler. Then, confirm that the distance matches the feeding length when printing.
- If the distance does not match the feeding length, follow the procedure from Step 1 to Step 5 and readjust.
- If the distance matches the feeding length, proceed to Step 7.

7. Refer to Chapter 1 "Media feed adjustment steps" P. 56 and select “PF4: Micro Print” on the operation panel.

- Check the pattern and micro adjustment value.
- In the pattern, look for a place that has least white lines or overlapping in images. The number printed below the adequate pattern is the micro adjustment value.

8. Press the [+] key or [-] key and enter the micro adjustment value according to the print result in Step 7.

When you know the adjustment value (when changing the media or for similar operations)

1. Enter the adjustment value for “PF5: Micro Change”.
2. Select whether you wish to print a confirm pattern and complete the setup.

PF1: Initial Print

PF1 :	Initial Print

Performs Initial Print.
Enter the “Feed Length” and press the [Enter] key.

Setting values	
Feed Length : 250 mm	100 mm to <250 mm> to 500 mm <> indicates the initial value.

- After the initial adjustment printing, cut the media.
- With a ruler, measure the length between “ ” in the pattern.
  In the example below, the measured place is shown in orange dotted lines and arrows (the orange parts are not actually printed).

Note

- The length of media that is fed (feeding length) for initial adjustment printing is normally set at 250 mm.
  If you increase the feeding length, the accuracy of the Media feed adjustment improves.
- To change the feeding length, press the [+] key or [-] key on Operation panel and change the set value.

PF2: Initial Change

PF2 :	**Initial Change**

Use the [+] / [-] key to enter the adjustment value, and press the [Enter] key.

Setting values

Init. :	**250.0 mm / 250 mm**

You can set a value that is between +50 mm and -50 mm of the feed length configured in "Initial Print".

PF3: Confirm Print

PF3 :	**Confirm Print**

Performs Confirm Print.
Enter the "Feed Length" and press the [Enter] key.

Setting values

Feed Length :	**250 mm**

100 mm to <250 mm> to 500 mm
<> indicates the initial value.

- After the confirmation adjustment printing, cut the media.
- With a ruler, measure the length between " ▮ " in the pattern.
  In the example below, the measured place is shown in orange dotted lines and arrows (the orange parts are not actually printed).
- If the measured length does not match the feeding length, re-correct with **PF1: Initial Print**.
- If the measured length matches the feeding length, proceed to **PF4: Micro Print**.

Note

- The length of media that is fed (feeding length) for confirmation adjustment printing, is normally set at 250 mm.
  If you increase the feeding length, the accuracy of the Media feed adjustment improves.
- To change the feeding length, press the [+] key or [-] key on Operation panel and change the set value.

PF4: Micro Print

PF4 :	Micro Print

Performs Micro adjustment Print.

Enter the appropriate micro adjustment value according to the print result.

- The colors of the numerals below the pattern vary between 4-color setting and 7-color setting.
  The following pattern is for 4-color setting.

- Observe the pattern and verify the micro adjustment value.
- In the pattern, look for a place that has least white lines or overlapping in images.
  The number printed below the pattern is the micro adjustment value.
- Enter the Micro adjustment value according to the print result.

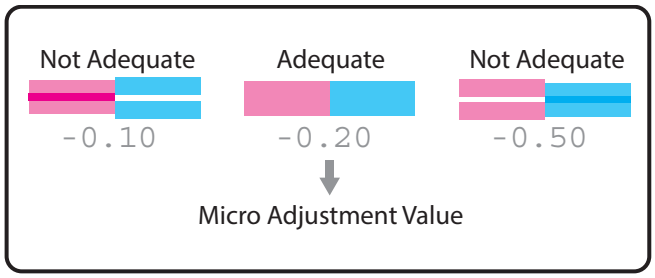

Note

The micro adjustment value saved becomes the pattern's standard value. For example, if "-0.20" is saved as the micro adjustment value and a pattern is printed again, the number below the center pattern changes from "0.00" to "-0.20", and the left edge to "+0.30" and right edge to "-0.70".

PF5: Micro Change

PF5 :	Micro Change

Use the [+] / [-] key to enter the adjustment value, and press the [Enter] key.

Select whether you wish to perform confirmation print and complete the setup.

Setting values	
Micro : 0.00%	-5.00% to <0.00%> to 5.00% <> indicates the initial value.

** > 4: Thickness

* *> 4 :	Thickness

Sets the thickness of the media you are using.
Use the [+] / [-] key to enter the value, and press the [Enter] key.

Setting values

Thickness :	170 µm

80 µm to <170 µm> to 3,500 µm
<> indicates the initial value.

Note

- This menu is to automatically adjust print quality to a certain extent. If you want to improve print quality, manually adjust it.
  Menu 2: Test Print
- If you have adjusted the print settings, you do not need to configure the thickness of the media in this menu.

** > 5: User Copy

* *> 5 :	UserCopy

This is for copying the currently selected User Type setting into another User Type.
The items that will be copied are: "Print Mode", "Effect", the "Confirm Print" and "PF Adjust" adjustment values and "Thickness".

Setting values

UserCopy :	Type 1	->	2
UserCopy :	Type 1	->	ALL

Here you can select the User Type to copy the settings into.
If you select ALL, the settings will be copied into all the User Type.

Set 2: Spitting

Set 2:	Spitting

Sets up the spitting operation while printing.
The display will shift to setting of the pass count only if “On” is set for “Spitting”.

Setting values	
Spitting : On	Perform the spitting operation on Spitting box located on the origin side for every shuttle. This is the initially set value.
Spitting : On Media	Perform the spitting operation on the page margins. The printing speed will be improved since the number of time to return to Spitting box is reduced.
Spitting : Off	Spitting operation is not performed.

Note

- Spitting is a maintenance operation for preventing clogging of the print head’s nozzles. It consumes ink.
- When Spitting is set to “Off”, Nozzles will become easily clogged because spitting is not performed. In such a case, print quality cannot be guaranteed.
- When the spitting setting is “On Media”, the maximum printable media width becomes 16 mm shorter.
  Therefore, the side margins become the value that you have set in Side Margin menu +8 mm.
  ☞ **"Set 3: Side Margin" P. 79**

Pass Count

Spitting :	On

Spitting :	On Media

This is for setting the interval at which the print head will carry out spitting operation.

- The head will carry out spitting operation every time it completes the number of passes that you set here.

Setting values	
Pass Count : 1 cnt	<1 cnt> to 999 cnt <> indicates the initial value.

Important!

If the number of spitting returns is set high, there is a higher chance of nozzle clogging when printing for a long time.
In such a case, print quality cannot be guaranteed.

<Example of spitting operation>

Spitting setting	Pass Count setting	Operation
On	1 cnt	Perform the spitting operation on Spitting box every time Print head returns to the origin position. Spitting operation is not performed over the media.
On	5 cnt	Performs the spitting operation on Spitting box on the origin side every five times Print head returns to the origin position. Spitting operation is not performed over the media.
On Media	1 cnt	Performs the spitting operation on Spitting box on the origin side every time Print head returns to the origin position. Perform the spitting operation on Spitting box every time Print head returns to the origin position.
On Media	5 cnt	Performs the spitting operation on Spitting box on the origin side every five times Print head returns to the origin position. Perform the spitting operation on Spitting box every time Print head returns to the origin position.
Off	—	Spitting is not performed on Spitting box or the media.

Set 3: Side Margin

Set 3: Side Margin

Set up the right and left margins (side margins) while printing.
Use the [+] / [-] key to enter the value, and press the [Enter] key.

Setting values	
Side Margin : 5 mm	<5 mm> to 25 mm <> indicates the initial value.

Note

When the Spitting menu is set to "On Media", the maximum printable media width becomes 16 mm shorter.
Therefore, the side margins become the value that you have set in Side Margin menu +8 mm.

☞ **"Set 2: Spitting" P. 78**

Set 4: Media Initial

Set 4: Media Initial

Sets whether to detect the media width while initializing the media.

Setting values	
Init. : Off	The media will not be detected.
Init. : Width	Detect the media width while initializing the media. This is the initially set value.

Note

When Media Initial menu is set to "Off", set the media width of the current media in Media Width menu.

Set 5: Media Width

Set 5:	**Media Width**

Sets the width of the current media when the Media Initial menu is set to “Off”.
Use the [+] / [-] key to enter the value, and press the [Enter] key.
When the Media Initial menu is set to “Width”, the detected media width will be displayed.

Setting values

Media Width :	**1000 mm**

210 mm to <1,000 mm> to 1,910 mm
<> indicates the initial value.

Set 6: Output Mode

Set 6:	**Output Mode**

Sets how the media is handled after printing.

Submenus

Output Mode :	**Off**

The Take-up Unit will not be used.

Output Mode :	**Take Up**

Set when using the Take-up Unit.
This is the initially set value.

When “Take Up” is set for the Output mode

Output Mode :	**Take Up**

When “Output Mode” is set to “Take up”, the menu is shifted to “Page Gap”.
In the Page Gap menu, you can change the margin setting between images.

Setting values

Page Gap :	**Normal**

The default margin setting between images will be applied.
This is the initially set value.

Page Gap :	**Narrow**

The margin setting between images is smaller than Normal.

After setting the Page Gap, sets the Ink drying time.
Use the [+] / [-] key to enter the value, and press the [Enter] key.

Setting values

InkDryTimer :	**0 sec**

<0 sec> to 60 min
<> indicates the initial value.

When “Off” is set for the Output mode

Output Mode :	**Off**

Sets the ink drying time.
Use the [+] / [-] key to enter the value, and press the [Enter] key.

Setting values

InkDryTimer :	**0 sec**

<0 sec> to 60 min
<> indicates the initial value.

Set 7: Origin

Set 7:	Origin

Sets the beginning of printing (origin) of the print data.
Set the menu when reprinting on the margin with changing the printing data position to the printed media.
Use the [+] / [-] key to enter the value, and press the [Enter] key.

Setting values

X (PF) : 0 mm ・ ・ ・ X (PF) : 15000 mm	X (media feeding distance): 0 mm to 15,000 mm
Y (CR) : 0 mm ・ ・ ・ Y (CR) : 1690 mm	Y (print head transferring distance) 0 mm to 1,690 mm

Note

Depending on the set value of the side margin, the maximum set value of Y (print head transferring distance) decreases.

☞ **"Set 3: Side Margin" P. 79**

The right side margin will be the following sum depending on the setting.

Y of Origin menu + 8 mm (when the spitting is set to On Media) + Value set in Side Margin menu.

☞ **"Set 2: Spitting" P. 78**
☞ **"Set 3: Side Margin" P. 79**

Set 8: Head Travel

Set 8:	Head Travel

Sets up the range that Print head moves while printing.

Setting values

Distance : Data	Print head moves the range of the print data width.
Distance : Machine	Print head moves from origin to the maximum printable media width.
Distance : Media	Print head shifts within the media width. This is the initially set value.

Set 9: Multi Strike

Set 9:	**Multi Strike**

Sets up the overwrite count per line.
Use the [+] / [-] key to enter the value, and press the [Enter] key.

Setting values

Strike Cnt :	**1 cnt**

<1 cnt> to 9 cnt
<> indicates the initial value.

Set 10: Strike Wait

Set 10:	**Strike Wait**

Sets up the waiting time while overwrite printing.
Use the [+] / [-] key to enter the value, and press the [Enter] key.

Setting values

Strike Wait :	**0.0 sec**

<0.0 sec> to 5.0 sec
<> indicates the initial value.

Set 11: Slant Check

Set 11:	**Slant Check**

Sets up slanting detection during media loading.

Setting values

Media Slant :	**Off**

Slant Check is not performed.
This is the initially set value.

Media Slant :	**On**

Slant Check is performed.

Set 12: Auto Cleaning

Set 12:	Auto Cleaning

Configure the settings for the auto cleaning operation.

Submenus

Auto 1 :	WaitingTime

Auto 1: Waiting Time

Auto 2 :	PrintingTime

Auto 2: Printing Time

Auto 3 :	Before Print

Auto 3: Before Print

Auto 1: Waiting Time

Auto 1 :	WaitingTime

For setting whether auto cleaning will be carried out before printing.

Setting values

WaitingTime :	360 min

Off / 10 min to <360 min> to 1,440 min

<> indicates the initial value.

Auto 2: Printing Time

Auto 2 :	PrintingTime

Set the auto cleaning interval during printing.

Setting values

PrintingTime :	Off

<Off> / 5 min to 180 min

<> indicates the initial value.

Auto 3: Before Print

Auto 3 :	Before Print

Set the value for auto cleaning before printing.

Setting values

Before Print :	Off

<Off> / On

<> indicates the initial value.

Note

If the head height is set to “High”, Auto Cleaning cannot be performed.

Set 13: Ink Status

Set 13:	**InkStatus**

The amount of ink remaining in each Ink cartridge is displayed. (unit: %)

Setting values

1 2 3 4 :	**XX / XX / XX / XX**
5 6 7 8 :	**XX / XX / XX / XX**

4-color setting:

- 1: K1 (Black)
- 2: K2 (Black)
- 3: C1 (Cyan)
- 4: C2 (Cyan)
- 5: M1 (Magenta)
- 6: M2 (Magenta)
- 7: Y1 (Yellow)
- 8: Y2 (Yellow)

7-color setting

- 1: M (Magenta)
- 2: Gr (Green)
- 3: C (Cyan)
- 4: Or (Orange)
- 5: Y (Yellow)
- 6: K1 (Black)
- 7: K2 (Black)
- 8: Bl (Blue)

Note

To display various information of IC chips, use genuine ink and S/C cards.

If Ink cartridges other than genuine Ink cartridges are used, ink status will not be displayed correctly.

Set 14: Media Length

Set 14:	**Media Length**

Sets up the roll media length.

Setting values

MediaKind :	**Off**	Media Length is not used. This is the initially set value.
MediaKind :	**Media 1**	Sets up the roll media length. The set values of the roll media length can be set as “Media 1” to “Media 3”.
MediaKind :	**Media 2**	
MediaKind :	**Media 3**	

If the Media Length is set to Media1, Media2 or Media3

MediaKind :	**Media 1**

Sets up the roll media length.

Setting values

Length :	**30 m**	1 m to <30 m> to 200 m <> indicates the initial value.

Set 15: Exhaust Fan

Set 15:	**Exhaust Fan**

Sets up Exhaust fan operation.
Ventilates the inside of the printer to stabilize the parts performance. It also decreases the contamination by ink mist inside the printer.
We recommend that you use Exhaust fan, especially when printing for a long time.

Setting values

Exhaust Fan : **Off**	Turn Off Exhaust fan.
Exhaust Fan : **Low**	Start Exhaust fan at Low. This is the initially set value.
Exhaust Fan : **High**	Start Exhaust fan at High.

Set 16: Longstore

Set 16:	**Longstore**

Wash Print head with the cleaning fluid.

Submenu

Longstore : **Start**	Wash Print head with the cleaning fluid. Press the [Enter] to perform head cleaning.

When performing a Longstore

Remove Cartridges

Remove Ink cartridge, and install Cleaning cartridge.

Note

Be sure to use the dedicated cleaning fluid.

Set 17: CR Maintenance

Set 17:	**CR Maintenance**

Performs maintenance.
Used in the following cases.

- Replacing absorption material for the flushing box
- Cleaning of cleaning wiper
- Cleaning of print head circumference

☞ **"Maintenance" P. 102**

Submenus

CR Maint. : **Start**	Performs maintenance.
CR Maint. : **End**	Completes maintenance. Perform the pumping operation (start/stop) by pressing the [-] key.

Set 18: Initialization

Set 18:	**Initialization**

Returns the settings of the printer to default.

Submenus

Init : ALL	For initializing the settings of all the menus.
Init : UserType	Initializes the settings in the User Type menu.
Init : Except UserType	Initializes the settings other than the ones in the User Type menu.

Set 19: Life Times

Set 19:	**Life Times**

Displays the operational life time of each part.

- The lifetime of each part is indicated by the asterisks (Maximum 5 asterisks: 100% left). As the part deteriorates, the number of asterisks decreases one by one (20%).
- The part should be changed when all of the asterisks have disappeared and “Change” is displayed.
  Contact your local MUTOH dealer to ask for replacing parts.
- After “Change” appears, “Life Times [Pump]” or a similar message will be displayed when you are not in this menu. You can delete this message by pressing the [Cancel] key.

Submenus

Head 1 : E* F**	Displays the service life for the print head 1. The service life in this case is at 60%.
Head 2 : E* F**	Displays the service life for the print head 2. The service life in this case is at 60%.
Pump : E* F**	Displays the service life for the pump. The service life in this case is at 60%.
CR Motor : Change	Displays the service life for the CR motor. The service life of the component in this case is over. Have the component replaced.
PF Motor : E** F**	Displays the service life for the PF motor. The service life in this case is at 80%.

Set 20: IP Address

Set 20:	**IP Address**

Sets the IP address of the printer.

- Use the [+] key to increase a setting value.
- Use the [-] key to decrease a setting value.
- Press the [Enter] key to confirm your input for a value. The cursor will move on to the next setting value.
- Confirm your input for each value.

Setting values	
192. 168. 1. 253	0.0.0.0 to <192.168.1.253> to 255.255.255.255 <> indicates the initial value.

Note

Be sure to set the IP address after consulting the network administrator.

Set 21: Subnet Mask

Set 21:	**Subnet Mask**

Sets the subnet mask of the printer.

- Use the [+] key to increase a setting value.
- Use the [-] key to decrease a setting value.
- Press the [Enter] key to confirm your input for a value. The cursor will move on to the next setting value.
- Confirm your input for each value.

Setting values	
255. 255. 255. 0	0.0.0.0 to <255.255.255.0> to 255.255.255.255 <> indicates the initial value.

Note

Be sure to set the subnet mask after consulting the network administrator.

Set 22: Gateway

Set 22:	**Gateway**

Sets the gateway.

- Use the [+] key to increase a setting value.
- Use the [-] key to decrease a setting value.
- Press the [Enter] key to confirm your input for a value. The cursor will move on to the next setting value.
- Confirm your input for each value.

Setting values	
192. 168. 1. 254	0.0.0.0 to <192.168.1.254> to 255.255.255.255 <> indicates the initial value.

Note

Be sure to set the gateway after consulting the network administrator.

Set 23: Header Dump

Set 23:	Header Dump

Sets whether to print the following information when printing.

- Data header
- Data dot number (printed only when Header damp setting is ON)
- Printing date and time
- Printer serial number
- Firmware version

Setting values

Header Dump : OFF	Dump data is not printed. This is the initially set value.
Header Dump : ON	Dump data is printed after the original image is printed.
Header Dump : DUMP	Prints only damp data. "Data dot number" is not printed.
Header Dump : PRINT	Prints the last header dump. If no history is available, "No Print Data" will appear on the front panel.

Note

- The data will be useful when contacting technical support.
- Performing printing if the printer is connected to PC, the print settings of RIP soft you are using are printed on data header.

Set 24: Single Head

Set 24:	Single Head

You can set whether or not to perform printing using only one Print head.

Setting values

Single Head : OFF	Both Print heads are used for printing. This is the initially set value.
Single Head : Head 1	Only left Print head is used for printing.
Single Head : Head 2	Only right Print head is used for printing.

Note

- This printer has 2 Print heads inside Print head unit.
- Even if "Head 1" or "Head 2" is set, when performing the Test print menu, the both Print heads are used for printing.
- When "Head 1" or "Head 2" is set, if "A-S. Fine&Wave" or "B-S.Fine&Wave" is selected, the selected Print head is further divided for printing.

Set 25: Start Feed

Set 25:	**Start Feed**

You can change the margin setting between images.

- Value over 0: The margin setting between images will be wider than when setting “0”.
- Value equal to 0: The default margin setting between images will be applied.
- Value below 0: The margin setting between images will be smaller than when setting “0”.

Setting values

Start Feed : **0.0 mm**	-10 mm to <0.0 mm> to 500.0 mm <> indicates the initial value.

Note

With take-up system: if you want to set “Start Feed” to below 0, set “Page Gap” to “Narrow”.

If not, the Start Feed setting is not reflected properly.

"When “Take Up” is set for the Output mode" P. 80

Set 26: Alert Buzzer

Set 26:	**Alert Buzzer**

Selects how to turn off the printer beep sound when an error occurs.
For unattended printing, you can select “Off” setting to avoid continuous buzzer beep.

Setting values

Alert Buzzer : **On**	Press any key on the front panel to turn off beep sound. This is the initially set value.
Alert Buzzer : **Off**	After several beeps, the printer automatically turns off beep sound.

Set 27: PF Feed

Set 27:	PF Feed

Specify “Feed Pitch” and “Feed Length” settings to feed roll media.
Use this menu to determine the appropriate weight for the take-up system.

☞ **Adjusting the Weight**

Choose the most appropriate “Feed Pitch” and “Feed Length” settings for the number of passes of the selected print mode.

☞ **Details of print mode**

- Use the [+] key to increase a setting value.
- Use the [-] key to decrease a setting value.
- Press the [Enter] key to confirm your input for a value. The cursor will move on to the next setting value.
- Confirm your input for each value.

Setting values	
Feed Pitch : 12 mm	Feed Pitch: • 4-color setting 24mm / 12mm / 8mm / 6mm / 3mm • 7-color setting 12mm / 6mm / 4mm / 3mm / 2mm
Feed Ln : 1 m	Feed Length: 1m / 2m / 3m / 5m / 10m

Correlation between feed pitch and PF pass

- 4-color configuration

Feed pitch	Number of PF pass
24mm	equivalent to 2 Pass
12mm	equivalent to 4 Pass
8mm	equivalent to 6 Pass
6mm	equivalent to 8 Pass
3mm	equivalent to 16 Pass

- 7-color configuration

Feed pitch	Number of PF pass
12mm	equivalent to 4 Pass
6mm	equivalent to 8 Pass
4mm	equivalent to 12 Pass
3mm	equivalent to 16 Pass
2mm	equivalent to 32 Pass

Set 28: Temporary

Set 28:	Temporary

Displays the menus which have been set to hide in the “Menu4: Menu Option” temporarily.
Press the [Enter] key to return to the previous menu with all set up items displayed.

Menu 2 : Test Print

Test 1: Nozzle Check

Test 1 :	Nozzle Check

It is used to check whether there are any clogged heads, or missing or blurred prints.

"Nozzle check" P. 50

- 4-color setting

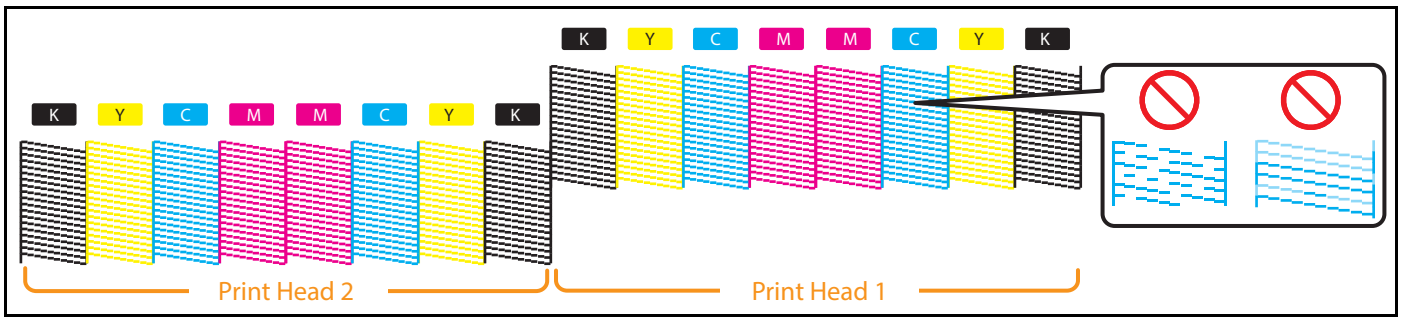

- 7-color setting

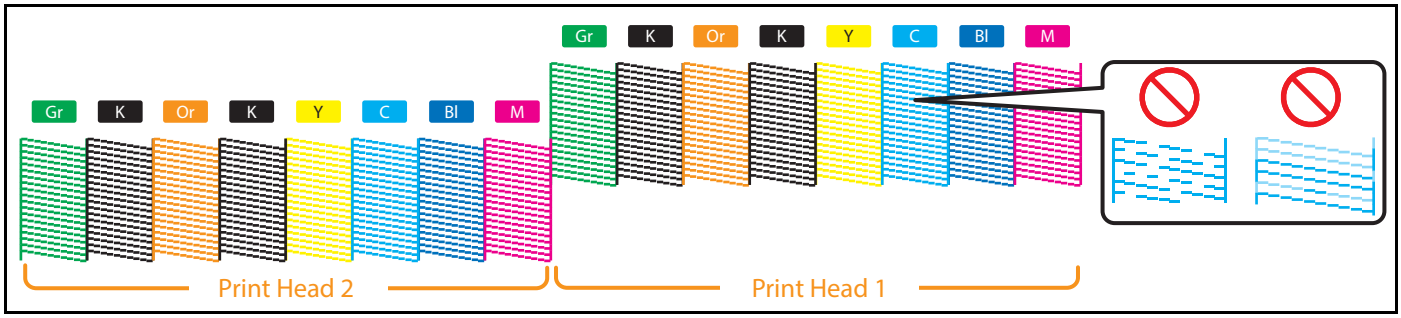

Note

The printer information (date and time printed, printer's serial number, firmware version) is printed on the nozzle check pattern.

Test 2: Mode Print

Test 2 :	Mode Print

Mode print can be performed.

Used to confirm the following printing conditions.

- Print quality
- Effect
- Fine adjustment value for feed correction

2016/1/01 00:00 G1(720x1080 6Pass Uni) -Fine & Fog/PF Adjust : 0.00%

Test 3: Setup List

Test 3 :	Setup List

Setup list printing is performed.
Use this to check the current setting contents and the User Type.

Setup List

Setup List

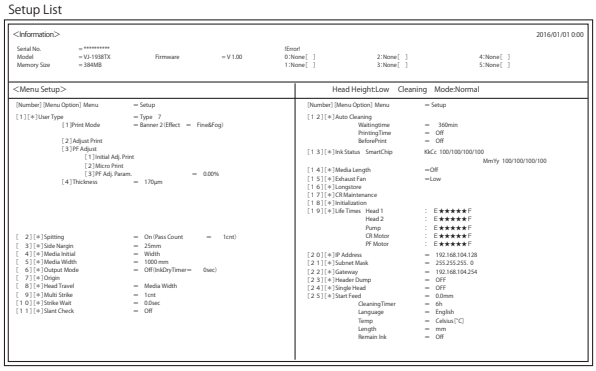

User Type List

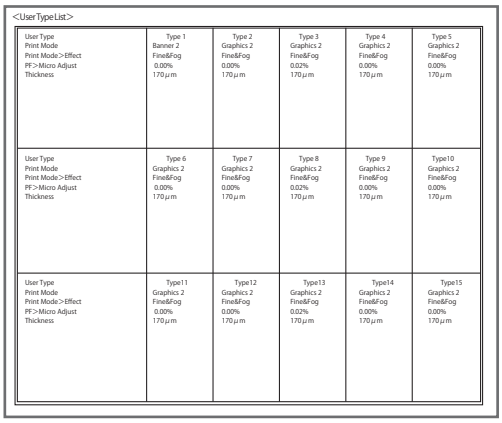

User Type Print Mode Print Mode:>Effect PF:>Micro Adjust Thickness	Type 1 Banner 2 Fine&Fog 0.00% 170μm	Type 2 Graphics 2 Fine&Fog 0.00% 170μm	Type 3 Graphics 2 Fine&Fog 0.02% 170μm	Type 4 Graphics 2 Fine&Fog 0.00% 170μm	Type 5 Graphics 2 Fine&Fog 0.00% 170μm
User Type Print Mode Print Mode:>Effect PF:>Micro Adjust Thickness	Type 6 Graphics 2 Fine&Fog 0.00% 170μm	Type 7 Graphics 2 Fine&Fog 0.00% 170μm	Type 8 Graphics 2 Fine&Fog 0.02% 170μm	Type 9 Graphics 2 Fine&Fog 0.00% 170μm	Type10 Graphics 2 Fine&Fog 0.00% 170μm
User Type Print Mode Print Mode:>Effect PF:>Micro Adjust Thickness	Type11 Graphics 2 Fine&Fog 0.00% 170μm	Type12 Graphics 2 Fine&Fog 0.00% 170μm	Type13 Graphics 2 Fine&Fog 0.02% 170μm	Type14 Graphics 2 Fine&Fog 0.00% 170μm	Type15 Graphics 2 Fine&Fog 0.00% 170μm

Test 4: Palette

Test 5 :	Palette

Palette print is executed for the color demonstration.

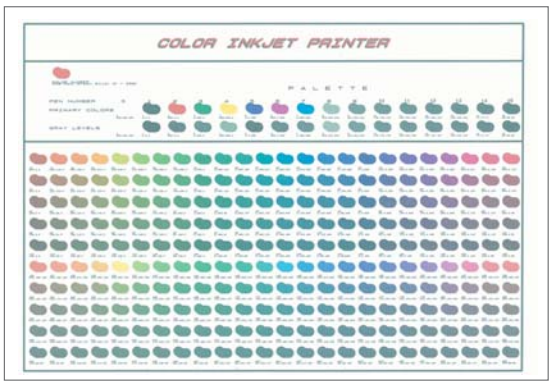

Note

When the selected print mode of the user type is “Graphics 1” or “Graphics 2”, Palette menu is not displayed.

☞ **"**>1: Print Mode" P. 68**

Test 5: Head Adjust

Test 5 :	HeadAdjust >

There are 2 print heads installed in the carriage of this product.
In this menu, you can align the print head 1 and print head 2 in order to prevent the prints from being misaligned. Press the [>] key to open the submenu.
Align the heads in the following cases

- If the image quality does not improve after you have used the “Adjust Print” menu.
- When switching to thin media or a type of media where ink drops do not spread.

After executing this menu, be sure to perform the “Adjust Print” function.
If you don't, the image quality during bidirectional printing may drop.

Submenus

Head Adj. 1 :	Standard

Adjustment is performed only for the print mode set by the current User Type.
You can make the adjustments more quickly than by selecting “Fine Pattern ALL” in “Custom”.

When selecting “Standard” here, you need to use the same print mode settings for the RIP (Raster Image Processor) as the print mode settings for the User Type.
Use the same settings for the resolution, pass and printing direction in the RIP print mode as in the print mode for the User Type.

Head Adj. 2 :	Custom

You can also adjust a print mode other than the one used for the current User Type. You can print with an optimal image quality even if the RIP print mode is different from the print mode used for the User Type.

When “HeadAdj. 2 Custom” is selected

Head Adj. 2 :	Custom

You can select the adjustment method.
When selecting “Fine Pattern X”(A to F), select the option that corresponds to the print mode used for printing.

If the resolution, pass and the printing direction of the RIP print mode differ from the print mode for the User Type, select the fine pattern that is suitable for the RIP.

☞ "Adjustment patterns for each print mode" P. 94

Submenus

Adj. 1 :	Fine Ptn. ALL

Adjusts all the patterns.

Adj. 2 :	Fine Pattern A
・ ・ ・	
Adj. 7 :	Fine Pattern F

For printing an adjust pattern selected from A to F.

Adjustment patterns for each print mode

Print mode	Print mode specifications	Adjustment pattern
Quality 1	1440 x 1440, 16 pass / 32 pass, Uni	B
Quality 2	1440 x 1440, 16 pass / 32 pass, Bi	
Quality 3	720 x 1440, 8 pass / 16 pass, Uni	
Quality 4	720 x 1440, 8 pass / 16 pass, Bi	
Graphics 1	720 x 1080, 6 pass / 12 pass, Uni	
Graphics 2	720 x 1080, 6 pass / 12 pass, Bi	
Banner 1	720 x 720, 4 pass / 8 pass, Uni	A
Banner 2	720 x 720, 4 pass / 8 pass, Bi	
Banner 3	360 x 720, 2 pass / 4 pass, Uni	
Banner 4	360 x 720, 2 pass / 4 pass, Bi	

Steps

1. Print the Head adjustment pattern and look for a place in the pattern that has least white lines or overlapping images.

   - The number printed under the pattern without alignment errors is the adjustment value.

2. Enter the adjustment value.

Head adjustment pattern

- Press the [Enter] key to carry out printing. For the Head adjustment pattern, the same patterns will be printed on both sides and center of the media.
- Check the print results and select the number that looks most aligned between 1 and 7.
- Pattern names such as “Pattern B: 4” are shown on the display. Use the [+]/[-] key to enter the number of the best-adjusted pattern, and press the [Enter] key.
- In the case of the picture below, enter “5”, so that the display reads “Pattern B: 5”.
- If you selected “Head Adj. 2: Custom” and “Fine Pattern ALL”, enter the adjustment value for A to F.

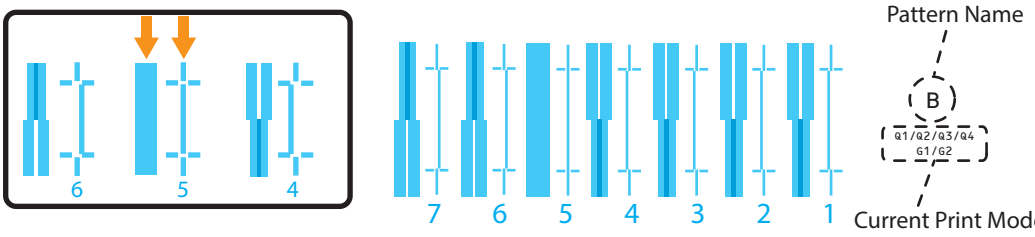

(If you carried out the adjustment with Custom settings, the head height and the printing information will also be printed.)

Menu 3 : Cleaning

Perform Head cleaning.

Time : Short	Consumes less ink than Normal cleaning.
Time : Normal	Conduct nozzle check before and after printing, and use when nozzle clogging is found.
Time : Long	Consumes more ink than Normal cleaning. When nozzle clogging still occurs after Normal cleaning, conduct Long cleaning.
Time : LittleCharge	Though much better cleaning results can be expected than Long cleaning, it consumes a large amount of ink.
Time : InitialCharge	Gives a rather higher cleaning effect than “LittleCharge”, but also consumes rather more ink.

Menu 4 : Menu Option

You can choose whether to display the menus in “Menu 1: Setup”.
Choose whether you wish to display a menu by pressing the [Enter] key.

[*]= the item will be displayed
[ ]= the item will not be displayed

1: [*] User Type	Displays the “User Type” menu. The initial value is [*].
2: [*] Spitting	Displays the “Spitting” menu. The initial value is [*].
3: [*] Side Margin	Displays the “Side Margin” menu. The initial value is [*].
⋮	⋮
27: [ ] PF Feed	Displays the “PF Feed” menu. The initial value is [ ].
28: ALL On	If you press the [Enter] key, all the items in Menu Option will be marked with a [*] (displayed).
29: ALL Off	If you press the [Enter] key, all the items in Menu Option will be marked with a [ ] (not displayed).

Menu 5 : Version

Version :	**X.XX**

Displays the versions of the firmware.

Menu 6 : Sleep Mode

Sleep Mode 1: Set Timer

Sleep Mode 1 :	**SetTimer**

This is for setting the interval at which head cleaning will be carried out in the sleep mode.

Setting values	
Cleaning Timer : 6h	1/2/3/4/5/<6>/9/12/18/24 hours <> indicates the initial value. If you set an interval, the display will shift to "SleepMode 2: Start".

Sleep Mode 2: Start

Sleep Mode 2 :	**Start**

Activate Sleep Mode.

Important!

During Sleep Mode, even if the set amount of time has passed, print head cleaning is not performed under the following circumstances.

- **When the maintenance cover is open**
- **The waste fluid tank is full.**
- **There is little remaining ink in the ink cartridge (or no ink).**
- **The ink cartridge has been removed.**
- **The inserted ink cartridge is not the genuine ink cartridge, etc.**

If one of the above conditions occurs during Head cleaning, cleaning is stopped.
When the printer returns to a normal state, Head cleaning is restarted.

Menu 7 : Display

Display 1: Language

Display 1:	Language

For setting the language that will be displayed.

Setting values

Language :	エイゴ

Displays will be in English.
This is the initially set value.

Language :	ニホンゴ

Displays will be in Japanese.

Display 2: Temperature

Display 2:	Temperature

For setting the temperature units that will be displayed.

Setting values

Temp :	Celsius [°C]

Displays the temperature in Celsius.
This is the initially set value.

Temp :	Fahrenheit [°F]

Displays the temperature in Fahrenheit.

Display 3: Length

Display 3:	Length

For setting the length units that will be displayed.

Setting values

Length :	mm

Displays the length in millimeters (mm).
This is the initially set value.

Length :	inch

Displays the length in inches (inch).

Display 4: Remain Ink

Display 4:	Remain Ink

For setting whether to display the ink level indicator.

Setting values	
Remain Ink : **On**	Remaining ink icons will be displayed.
Remain Ink : **Off**	Remaining ink icons will not be displayed. This is the initially set value.

Icon displays on operation panel

If you turn “Remain Ink” on, the ink and cartridge indicator will appear on the display in the following cases.

- When no menu is displayed
- When there is an ink or cartridge error

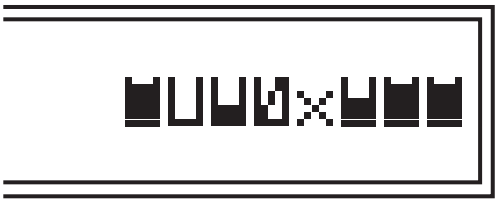

- In the display shown on the left, the slot 2 ink bag’s ink is low, the slot 4 ink bag’s ink has run out, and no ink bag has been inserted in slot 5.
- The meanings of the icons are as set out below.

	Remaining ink amount: More than 80%, less than 100%		Remaining ink amount: Less than 20%
	Remaining ink amount: More than 60%, less than 80%		Ink Low
	Remaining ink amount: More than 40%, less than 60%		Ink End
	Remaining ink amount: More than 20%, less than 40%		No cartridge

Menu 8 : Job Status

JobStatus :	**Completed**

Displays if the print is completed.

- When the print is completed: [Completed]
- When the print is canceled: [Canceled]

ToDoLength :	**XXX.X m**

The total length of print data (media feeding direction) will be displayed.

Done :	**XXX.X m**

The printed length will be displayed.

Remain :	**XXX.X m**

The remaining length of print data will be displayed.

Note

- The values displayed in this function are just standard values, not guarantee the accuracy.
- If the print data includes no length data, all information will be displayed as “0”.
- This function is to check the information of print data with the print operation is completed. For the details on data while printing, please refer to the **"Menu 3: Job Status" P. 60**.

Chapter 3 Maintenance

Maintenance 102

Checking ink and replacing ink cartridge 103

Checking ink level 103
When it becomes time to replace ink cartridge 104
Replacing ink 104

Emptying waste fluid tank 107

Emptying waste fluid tank 107

Cleaning each part 108

Head cleaning 108
Cleaning of cleaning wiper 110
Cleaning of print head circumference 113
Inside cleaning 115
Maintaining the ink gutter 116
Cleaning the Take-up System 122

Replacing consumable parts 123

Replacing absorption material for the flushing box 123
Replacing the ink gutter filter 126

Moving or transporting the printer 128

Moving the printer 128
Transporting the printer 129
Long-term storage 130
Performing initial charging after head cleaning 133

Maintenance

To maintain the performance of this product, please conduct maintenance by yourself.
The types of maintenance are shown next.

Before and after daily operation	"Nozzle check and cleaning" P. 50
Based on your usage condition	"Head cleaning" P. 108 "Replacing ink" P. 104 "Emptying waste fluid tank" P. 107 "Replacing absorption material for the flushing box" P. 123
Weekly	"Cleaning of cleaning wiper" P. 110 "Cleaning of print head circumference" P. 113
Monthly	"Inside cleaning" P. 115
Once a week if the ink gutter filter looks dirty with waste ink	"Maintaining the ink gutter" P. 116
When not used for a week or more	"Head cleaning" P. 108 (Once a week)
When not used for a long period	"Long-term storage" P. 130

Important!

Since a service technician has to handle following cases, please contact your local MUTOH dealer.

- **Error requiring restart is happening repeatedly.**
- **The message to notify the life of pump and various motors is displayed.**

☞ "Messages and Error Messages" P. 136

Checking ink and replacing ink cartridge

Checking ink level

[1]

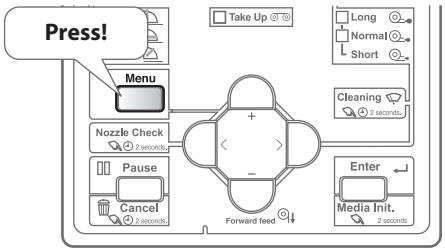

Press the [Menu] key.

[2]

Menu 1 :	**Setup >**

Press the [>] key.

[3]

Set13 :	**InkStatus**

Press the [-] key several times, to bring up the display on the left.
Press the [Enter] key.

[4]

1 2 3 4 : 100 / 90 / 80 / 70

5 6 7 8 : 100 / 90 / 80 / 70

Press the [-] key to change the display.

- The ink level is displayed from 0% to 100%.

- 4-color setting

1	K1 (Black)	2	K2 (Black)	3	C1 (Cyan)	4	C2 (Cyan)
5	M1 (Magenta)	6	M2 (Magenta)	7	Y1 (Yellow)	8	Y2 (Yellow)

- 7-color setting

1	M (Magenta)	2	Gr (Green)	3	C (Cyan)	4	Or (Orange)
5	Y (Yellow)	6	K1 (Black)	7	K2 (Black)	8	Bl (Blue)

When it becomes time to replace ink cartridge

When the ink level becomes low, the error LED of the operation panel flashes and a buzzer sounds.

Steps

[1]

[4] Ink Low
Ink Low

Press the [Enter] key.

- The buzzer stops.
- In the figure to the left, the slot 4 ink bag's ink is nearing replacement.

[2] Prepare the replacement ink.

Replacing ink

When ink level becomes low, the error LED of the operation panel flashes and a buzzer sounds.
Also, [Ink End] is displayed on the operation panel. Promptly replace the ink.

If the ink is not replaced within a certain period after [Ink End] is displayed on the operation panel, printing temporarily stops.
In this case, replace the ink with new ink to restart printing.

Important!

- **Do not replace ink cartridge when the power of this product is OFF.**
  Ink level cannot be detected correctly.
- **If ink cartridge is moved from cold to warm place, leave it at least 3 hours.**
- **If you do not have any replacement ink, do not remove the empty ink bag or high-capacity ink pack adapter from the printer.**
  Leaving them removed could cause the print head to become clogged.

1. Removing the high-capacity ink pack adapter

Note

The High-capacity ink pack adapter is sold separately.

[1]

[68] Ink End
Ink End

Press the [Enter] key.

- The buzzer stops.
- In the figure to the left, the slot 6 and slot 8 ink bags must be replaced.

[2]

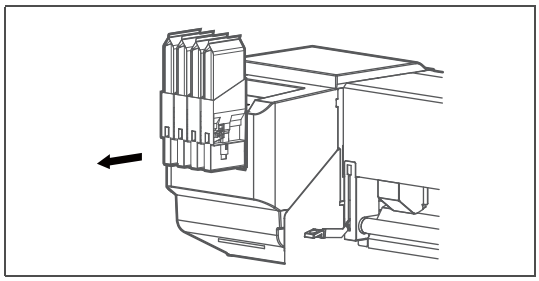

Remove the high-capacity ink pack adapter to be replaced.

[3]

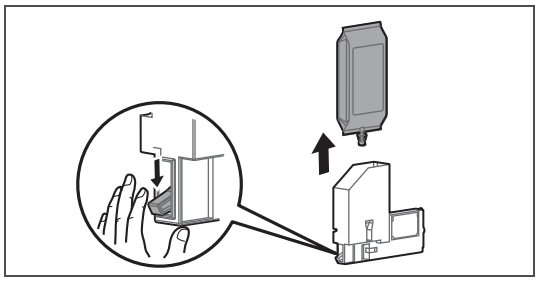

Lower the lock lever on the high-capacity ink pack adapter and remove the empty ink bag.

[4]

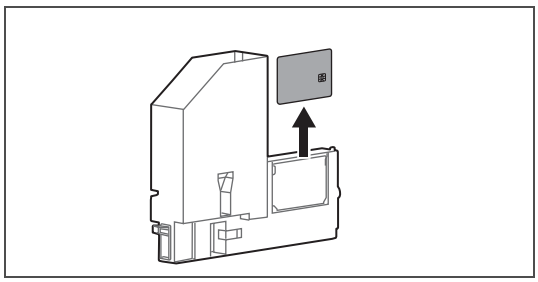

Remove the smart chip card from the high-capacity ink pack adapter.

2. Installing the ink bag and smart chip card

[1]

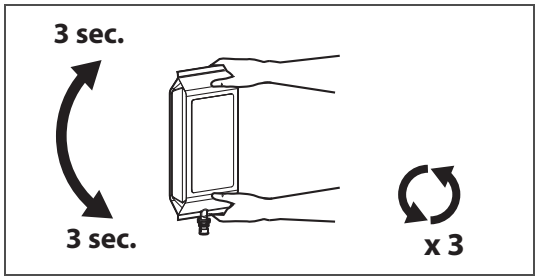

Open the new ink bag, and shake it as instructed below.

- Turn the ink plug upward and wait for 3 seconds.
- Next, turn the ink plug downward and wait for 3 seconds.
- Repeat that 3 times.

[2]

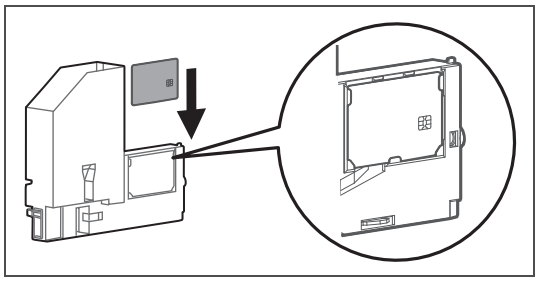

Slide the smart chip card into the tab on the high-capacity ink pack adapter to install it.

[3]

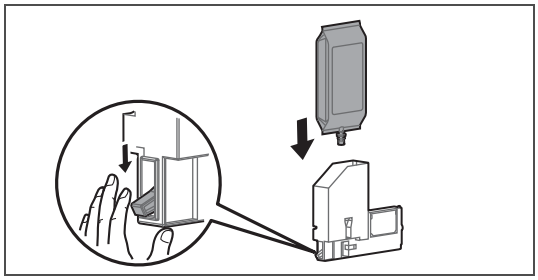

Lower the lock lever on the high-capacity ink pack adapter and insert the ink bag.

- Insert all the way to the end.

[4]

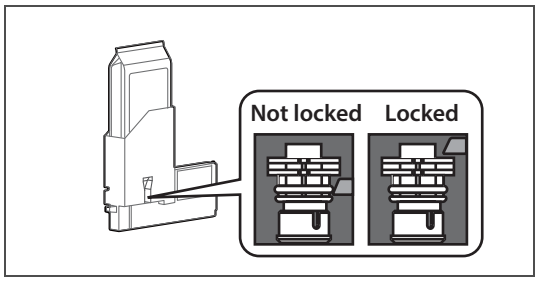

Confirm that the ink bag is inserted all the way and is locked.

[5]

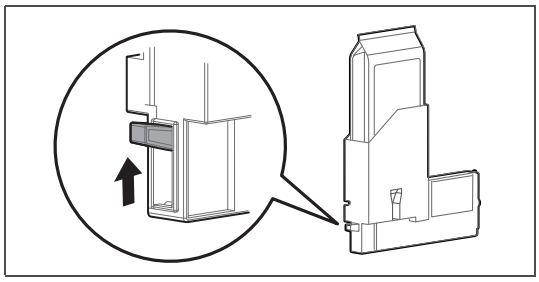

Confirm that the lock lever on the high-capacity ink pack adapter is in its original position.

3. Installing the high-capacity ink pack adapter

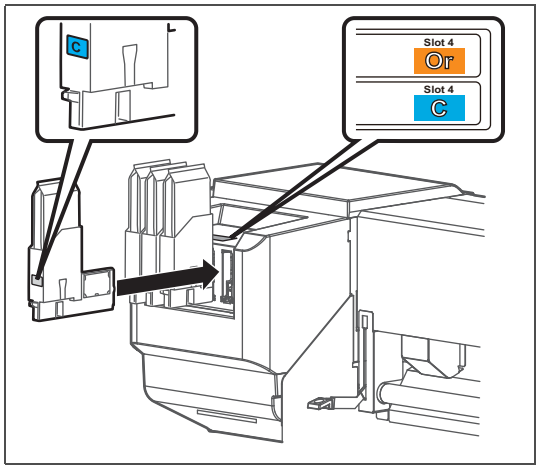

Insert the high-capacity ink pack adapter.

- Match the colors of the label on the printer and the label on the high-capacity ink pack adapter.
- Firmly insert it all the way in.

Note

Place the used ink bag in a plastic bag or the like and dispose of it in accordance with local ordinances and municipal instructions.

Emptying waste fluid tank

Emptying waste fluid tank

In the following cases, move the waste ink in the waste fluid tank into a container to discharge it.

- When Waste fluid tank is more than half full.
- When “Full WasteInkTank” is displayed on operation panel.

Display messages

Full WasteInkTank

The waste fluid tank has become full. Empty the waste fluid tank immediately.

- Printing or other operation will stop. It will resume when you have carried out “ResetWasteInk” below.

1. Transfer the waste ink

[1] Prepare a container to put the waste ink in, such as a waste fluid tank (sold separately).

Important!

The capacity of waste fluid tank is 2,000 ml. Make sure to prepare a container that has enough capacity when discharging waste ink.

[2] Cover the floor beneath the waste fluid tank using paper you do not need or the like.

[3]

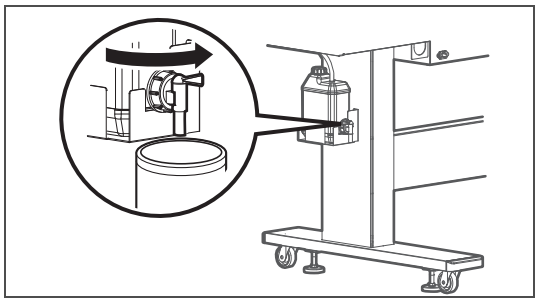

Open the waste fluid valve, and transfer the waste fluid to the container.

[4]

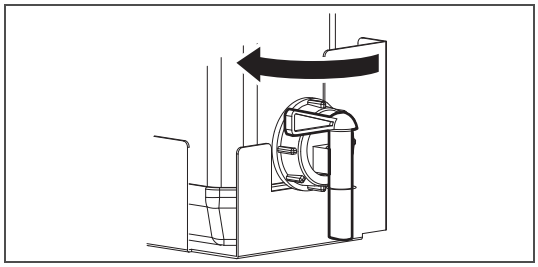

After pouring the waste fluid to the empty container, close the waste fluid valve securely.

[5] Wipe the opening of Waste fluid valve with a cloth, etc.

[6] Dispose of the waste fluid as an industrial waste product.

WARNING

You are obligated to properly dispose of waste fluid from the printer in compliance with Wastes Disposal and Public Cleansing Act and local ordinances. Delegate disposal to an industrial waste disposal contractor.

Cleaning each part

To use this product always in its best condition, please clean periodically.

Head cleaning

When nozzle clogging is found in nozzle check, conduct head cleaning. Head cleaning consumes ink.
There are several cleaning modes in this product. Please use them accordingly based on your usage condition.

Short cleaning	Consumes less ink than Normal cleaning.
Normal cleaning	Conduct nozzle check before and after printing, and use when nozzle clogging is found.
Long cleaning	Consumes more ink than Normal cleaning. When nozzle clogging still occurs after Normal cleaning, conduct Long cleaning.
Little Charge	Though much better cleaning results can be expected than Long cleaning, it consumes a large amount of ink. *This mode cannot be selected via the “Cleaning” key. Select it from the Cleaning submenu in the Panel Setting Menus. "Menu 3: Cleaning" P. 95
Initial Charge	Gives a rather higher cleaning effect than “LittleCharge”, but also consumes rather more ink. *This mode cannot be selected via the “Cleaning” key. Select it from the Cleaning submenu in the Panel Setting Menus. "Menu 3: Cleaning" P. 95

Steps for head cleaning

[1]

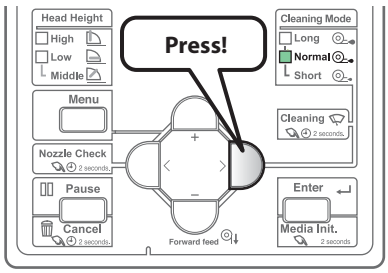

Use the [Cleaning] key to select a cleaning mode.

- The “Cleaning Mode” indicators will change each time the key is pressed.

Note

- You can alternatively do this via the printer driver or the MSM’s remote panel.
- The “Cleaning Mode” indicators will change as shown below.

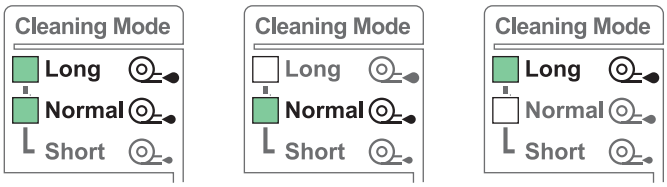

Short Cleaning **Normal Cleaning** **Long Cleaning**

[2]

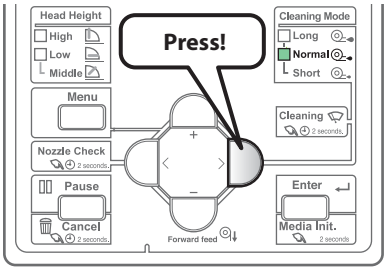

Press the [Cleaning] key for more than two seconds.

- Cleaning will start.

[3] Conduct Nozzle Check.

- If nozzle clogging still remains, repeat cleaning and nozzle check.

☞ **"Steps for head cleaning" P. 108**

Note

- When nozzle clogging remains even after repeating normal cleaning several times, conduct Long cleaning.
- When nozzle clogging remains even after repeating Long cleaning several times, conduct **"Cleaning of cleaning wiper" P. 110** or **"Cleaning of print head circumference" P. 113**.
- If the nozzle clog still is not rectified, carry out “LittleCharge” via the Cleaning submenu in the Panel Setting Menus.

Cleaning of cleaning wiper

Cleaning period:

- Weekly
- When print blurring and dot missing remain after head cleaning is done.

Preparation:

- Cleaning stick

Important!

During cleaning, please note the followings.

- **If it is hard to remove the stain, perform "Short" Head cleaning, and then clean again.**
- **Use a cleaning stick in dry condition. If moisten with water or solution, it can cause damage to the print head.**
- **Do not touch the tip of a cleaning stick with fingers. If sebum is adhered, it can cause damage to the print head.**
- **Do not reuse a cleaning stick. Dusts can adhere causing damage to the print head.**
- **Standard cleaning time should be within 5 minutes. If it takes longer, the stick can dry causing damage to the print head.**

1. Putting the printer into the CR maintenance mode

[1]

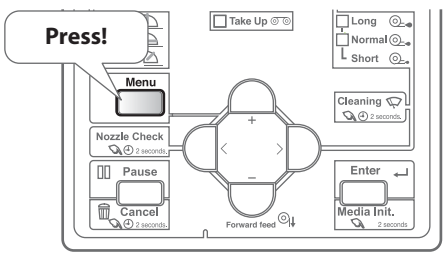

Press the [Menu] key.

[2]

Menu 1 :	**Setup >**

Press the [>] key.

[3]

Set17 :	**CR Maintenance**

Press the [-] key several times, to bring up the display on the left.
Press the [Enter] key.

[4]

CR Maint. :	**Start**

Press the [Enter] key.

- The carriage will move to the left side of the printer.
- The cleaning wiper will move upward.

CR Maint. :	**End**

The message on the left will appear.

- Start cleaning.

Note

If you press the [-] key while [CR Maint. : End] is displayed, the pump is activated, sucking up the ink in the cap.

2. Cleaning the cleaning wiper

[1]

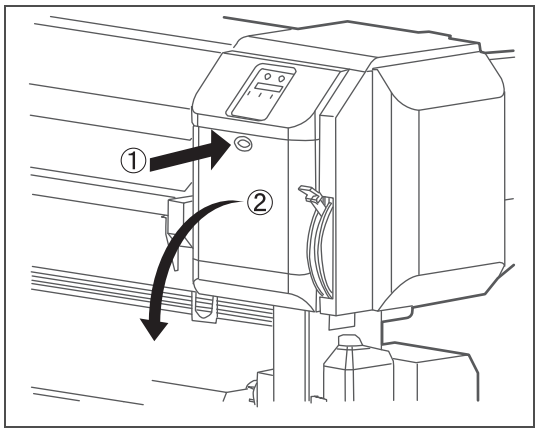

Open the maintenance cover on the right side.

[2]

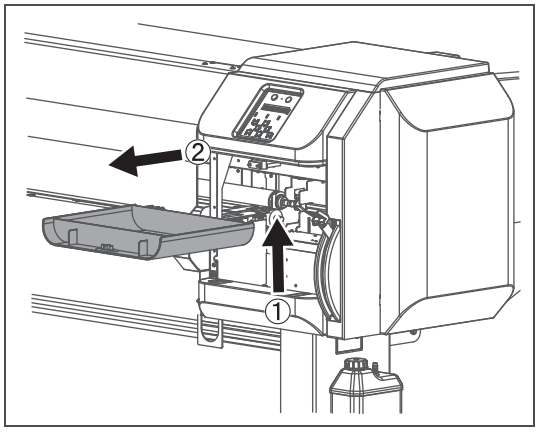

Detach the maintenance cover.

[3]

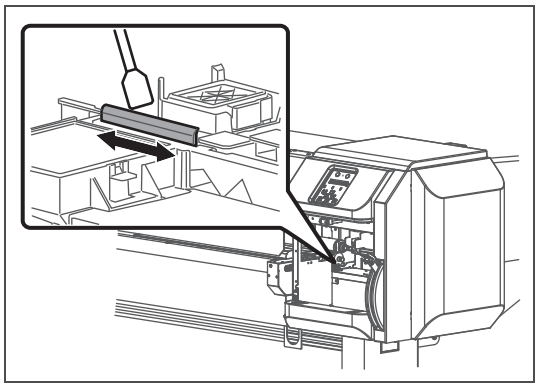

Wipe the cleaning wiper with a cleaning stick.

- Wipe the left side surface of cleaning wiper going back and forth.

Important!

If it is hard to remove the stain, perform "Short" Head cleaning, and then clean again.

[4]

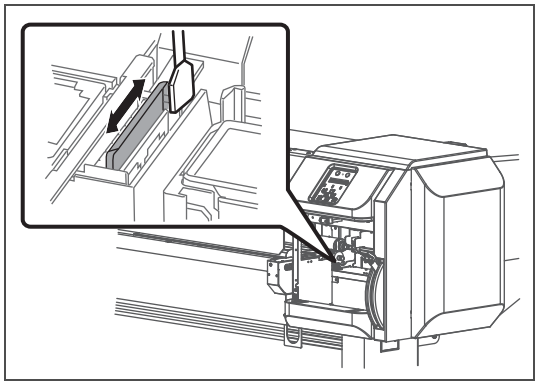

Wipe the right side surface of cleaning wiper going back and forth.

[5]

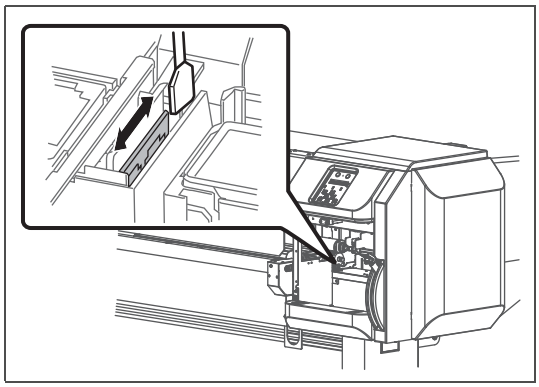

Wipe the right side surface of the base of cleaning wiper going back and forth.

[6]

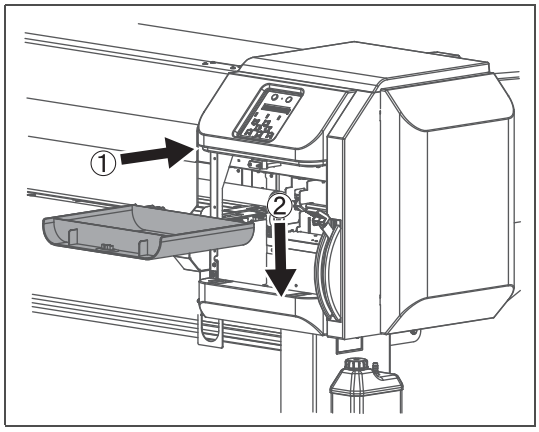

Attach the maintenance cover.

[7]

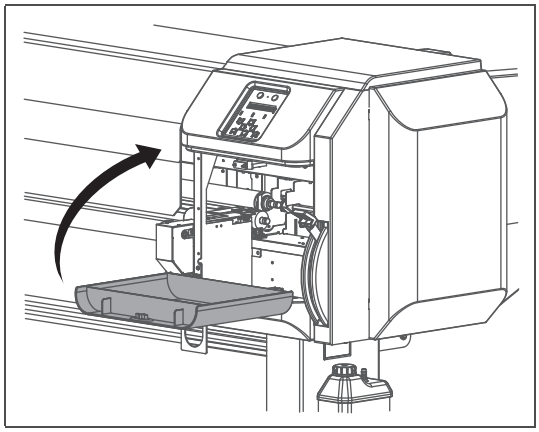

Close the maintenance cover.

[8]

CR Maint. :	**End**

Press the [Enter] key.

CR Maint. :	**Start**

The message on the left will appear.

- That ends the procedure.

Cleaning of print head circumference

Cleaning period:

- Weekly
- When print blurring and dot missing remain after head cleaning is done.

Preparation:

- Cleaning stick

Important!

During cleaning, please note the followings.

- **Use a cleaning stick in dry condition. If moisten with water or solution, it can cause damage to the print head.**
- **Do not touch the tip of a cleaning stick with fingers. If sebum is adhered, it can cause damage to the print head.**
- **Do not reuse a cleaning stick. Dusts can adhere causing damage to the print head.**
- **Standard cleaning time should be within 5 minutes. If it takes longer, the stick can dry causing damage to the print head.**

Steps

[1] Put the printer into the CR maintenance mode.

☞ **"Putting the printer into the CR maintenance mode" P. 110** under **「Cleaning of cleaning wiper」**

[2] Open the maintenance cover on the left side.

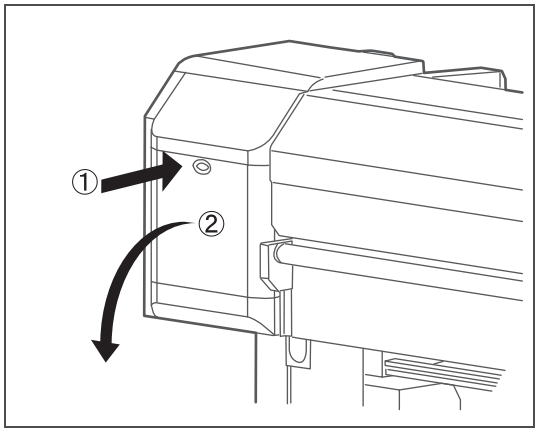

[3] Detach the maintenance cover.

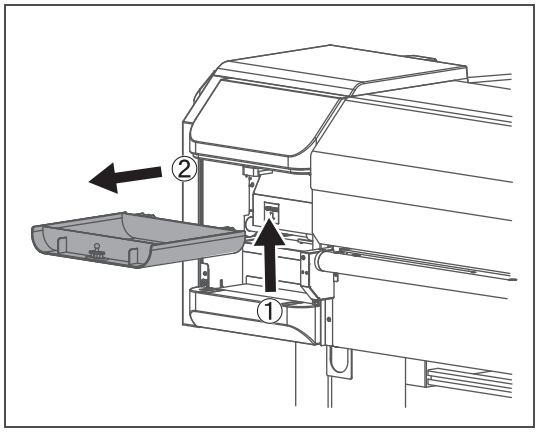

[4]

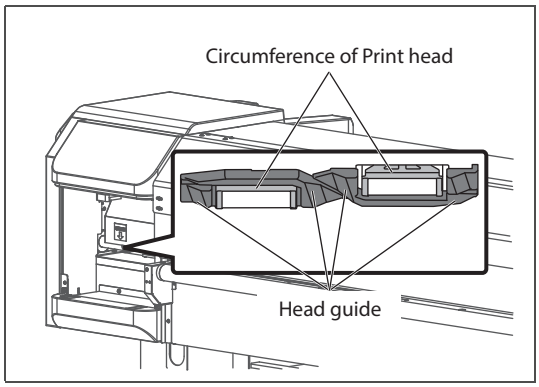

Look at the bottom side of the carriage and check if dusts and ink lump are adhered.

- Print head circumference (silver metal part)
- Print head guide part (black plastic part)

[5]

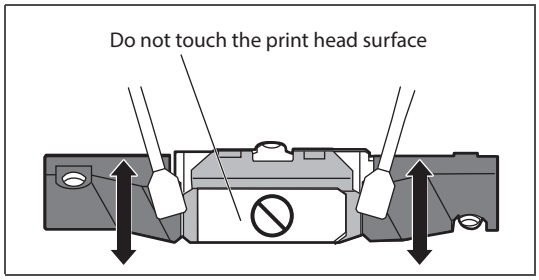

If dusts or ink lump are adhered, clean with a cleaning stick.

Important!

Do not touch the print head surface with fingers or a cleaning stick. It can cause damage to the print head.

[6]

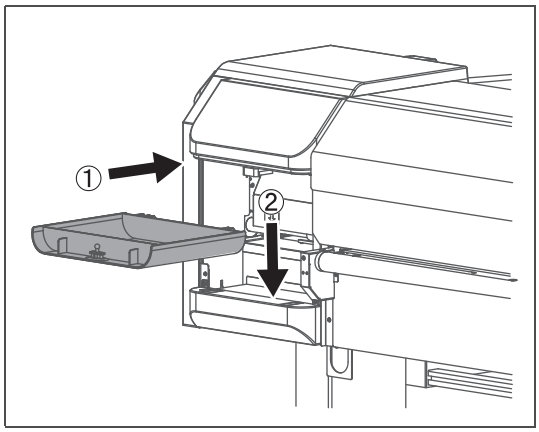

Attach the maintenance cover.

[7]

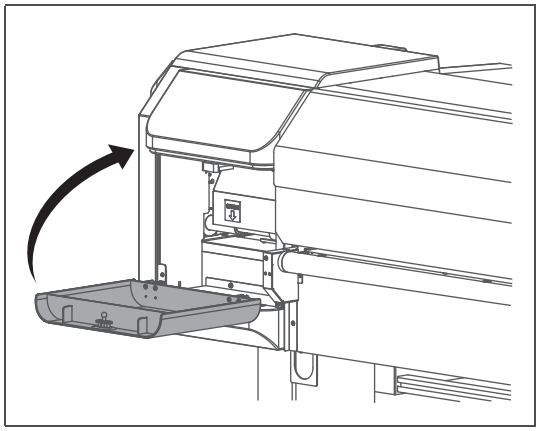

Close the maintenance cover.

[8]

CR Maint. :	**End**

Press the [Enter] key.

CR Maint. :	**Start**

The message on the left will appear.

- That ends the procedure.

Inside cleaning

Cleaning period:

- Monthly
- When dust or ink stains are visible

Preparation:

- Soft cloth

CAUTION

Unplug the power cable with the power OFF, before cleaning the inside of the printer.

Steps

[1] Remove the media.

[2] Confirm that the power for the printer and the take-up system is off.

[3]

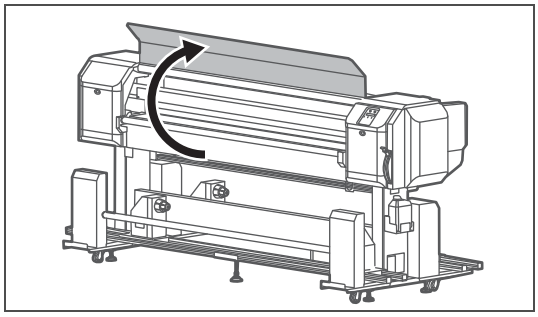

Open the front cover.

[4]

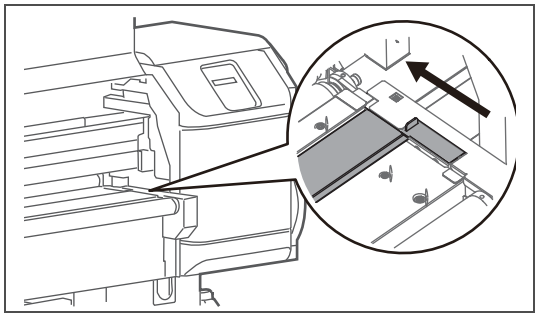

Close the gutter cover.

[5]

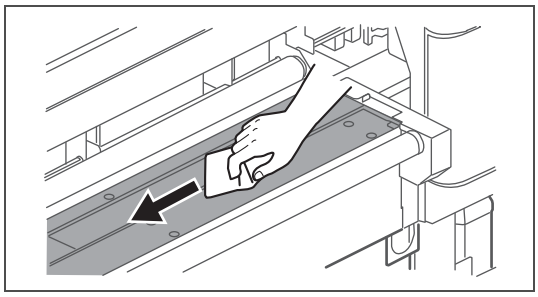

Use a wet, tightly-wrung soft cloth to clean the gutter cover and the paper guide.

Important!

Do not blow off dusts inside the product with a gas duster. Dust can attach to moving parts, causing abnormal sound or malfunctions.

[6] 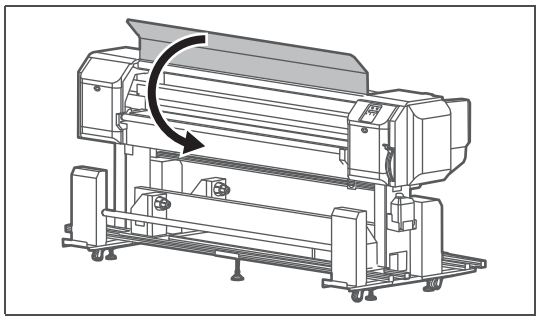 Close the front cover.

Maintaining the ink gutter

Check and clean the ink gutter regularly.

WARNING

When cleaning the gutter, be sure to turn OFF the power and remove the power plug from the outlet.

Cleaning the ink gutter filter

Before cleaning the ink gutter filter:

- Prepare a waste liquid container
- Connect the waste liquid tube to the container.

Cleaning period:

- Once a week if the ink gutter filter looks dirty with waste ink (This depends on how frequently you use the printer. Check the ink gutter regularly).

Preparation:

- Plastic gloves (commercially available)
- Bottle for cleaning water (commercially available)
- Waste liquid container (commercially available)

Important!

- **Do not pour more than 1.5 litters of water into the gutter. Otherwise, water may overflow.**
- **Waste liquid container should be large enough to fill the waste liquid from the gutter.**

[1] Unload the media.

[2] Make sure to unplug the power cable of the printer and the Take-up System from the outlet.

[3] Wear the plastic gloves.

[4]

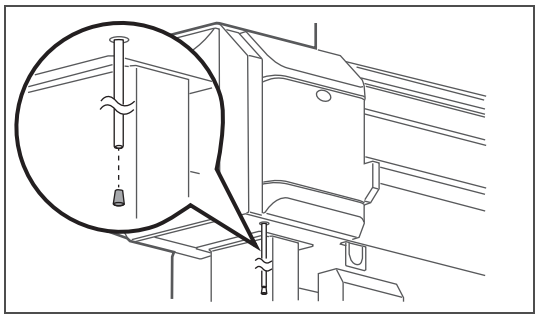

Pull out the plug on the waste liquid tube of the gutter.

- The waste liquid tube is located on the lower left side of the printer.

[5]

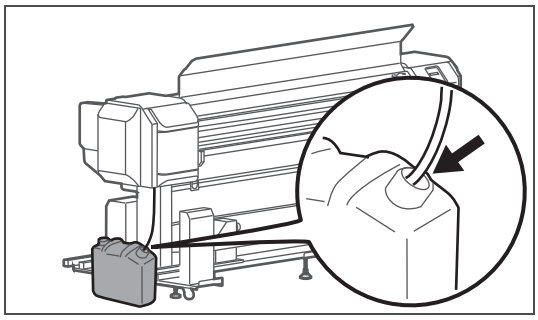

Connect the waste liquid tube to the waste liquid container.

[6]

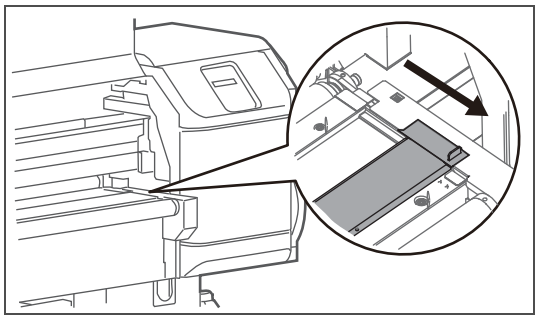

Open the ink gutter cover.

[7]

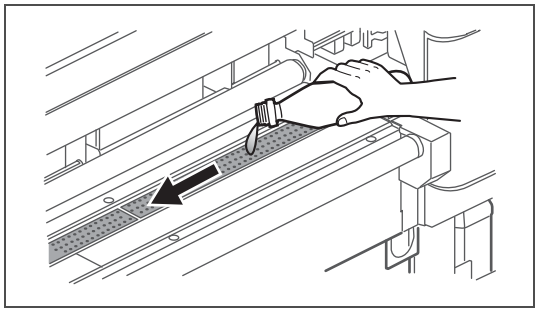

- Put some water into the bottle.
- Pour the water into the ink gutter filter to wash off the ink.

WARNING

If foreign substances or liquids such as water entered the printer, do not use the printer as it is.
It could lead to an electric shock or fire.
Contact the customer support.

[8] Once the waste liquid has stopped draining, insert the stopper into the waste liquid tube.

[9] Close the ink gutter cover.

[10] Dispose of the waste fluid as an industrial waste product.

Cleaning period:

- Once a week while the ink gutter filter is cleaned (This depends on how frequently you use the printer. Check the ink gutter regularly)

Preparation:

- Plastic gloves (commercially available)
- Soft cloth (commercially available)
- Waste sheet of paper (which ink cannot strike through.)

[1] Make sure to unplug the power cable of the printer and the Take-up System from the outlet.

[2] Wear the plastic gloves.

[3] 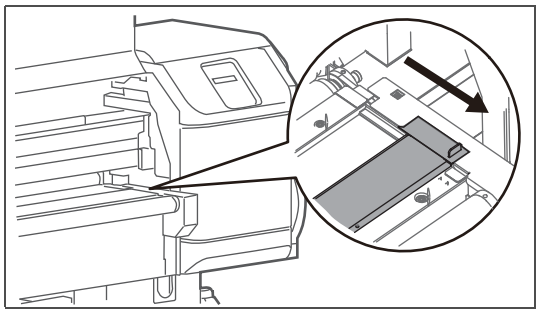

Open the ink gutter cover.

[4] Lay a waste sheet of paper on the ink gutter cover, the media guide and the front roller.

Important!

- **Ink may drip from the ink gutter filter.**
- **We recommend you to place a waste paper on the floor.**

[5] 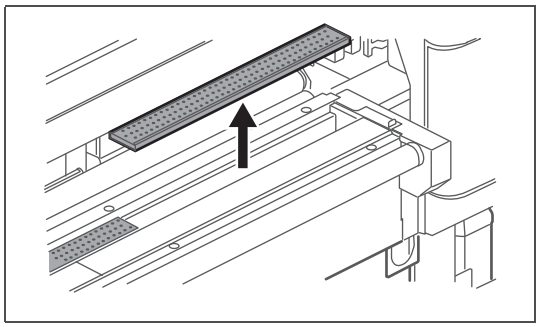

Remove the ink gutter filter and its frame (x 4).

[6] 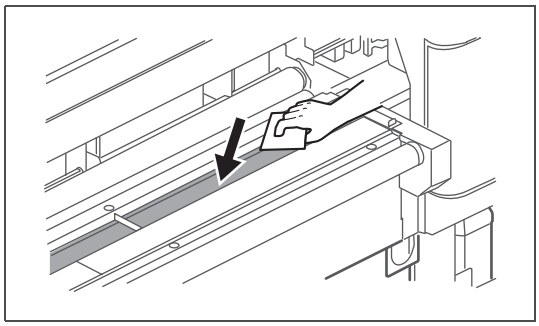

- Wipe the inside of the gutter with a soft cloth dampened with water.
- If the ink gutter is very dirty, refer to the section below and wash it with water.

"Washing the gutter with water" P. 119

Note

The cloth that you used for wiping off the ink and the paper stained with ink are industrial waste. Dispose of them properly.

[7] 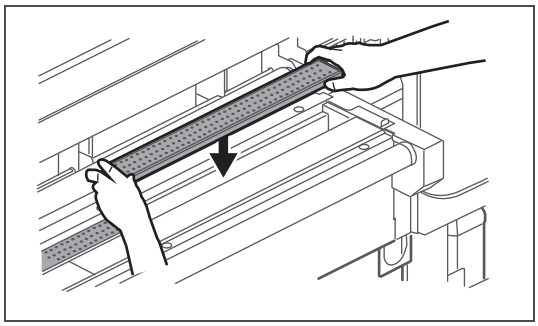

Put the ink gutter filter back in its place.

- Firmly insert the ink gutter filter frame into the gutter.

Important!

If the ink gutter filter frame is not in its place, the print head strike or print head damage may occur.

[8] Close the ink gutter cover.

- If you cannot close the cover properly, check the ink gutter filter attachment.

[9] Close the front cover.

[10] Dispose of the waste fluid as an industrial waste product.

Washing the gutter with water

To wash the inside of the gutter with water, use a waste liquid container and connect it to the waste liquid tube protruding from the gutter.

Preparation:

- Plastic gloves (commercially available)
- Bottle for cleaning water (commercially available)
- Waste liquid container (commercially available)

Important!

- **Do not pour more than 1.5 litters of water into the gutter. Otherwise, water may overflow.**
- **Waste liquid container should be large enough to fill the waste liquid from the gutter.**

[1] Make sure to unplug the power cable of the printer and the Take-up System from the outlet.

[2] Wear the plastic gloves.

[3] 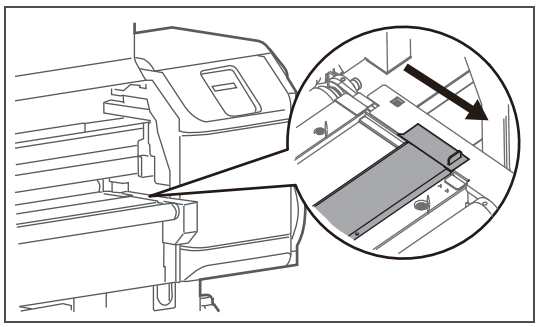

Open the ink gutter cover.

[4]

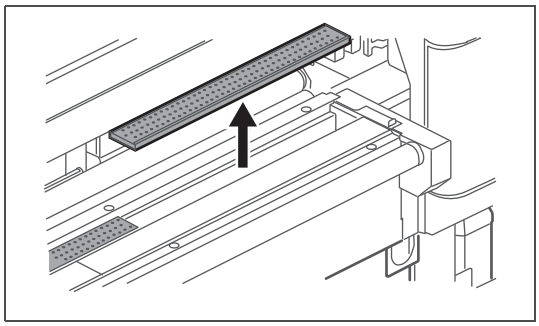

Remove the ink gutter filter and its frame (x 4).

[5]

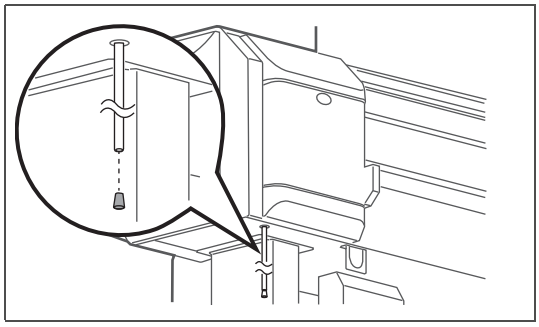

Pull out the plug on the waste liquid tube of the gutter.

- The waste liquid tube is located on the lower left side of the printer.

[6]

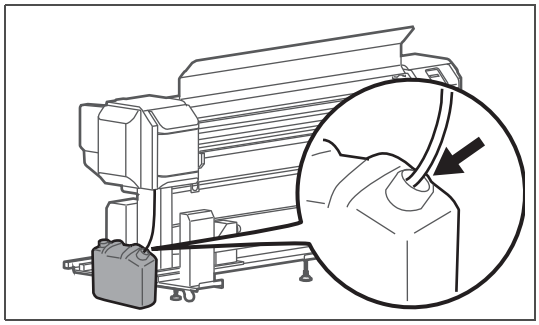

Connect the waste liquid tube to the waste liquid container.

[7]

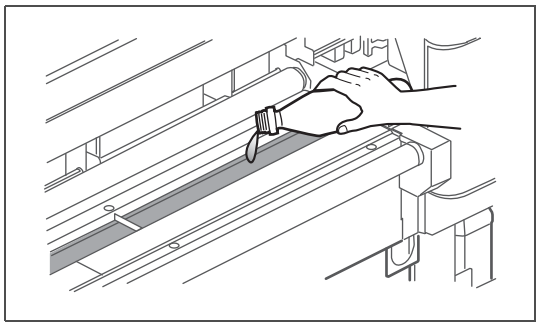

Wash the gutter with water.

WARNING

The water that you used to wash the gutter with is industrial waste.
Do not dump this waste water into sewers.

[8]

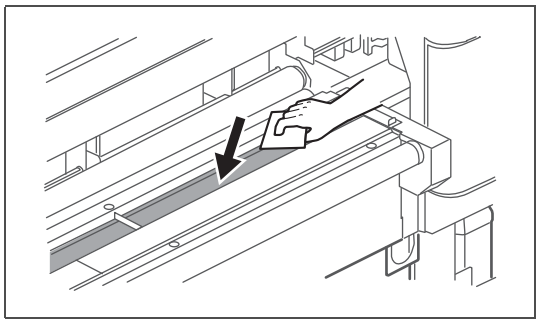

Wipe the inside of the gutter with a soft cloth dampened with water.

Note

The cloth that you used for wiping off the ink and the paper stained with ink are industrial waste. Dispose of them properly.

[9] Put the plug back into the waste liquid tube.

[10]

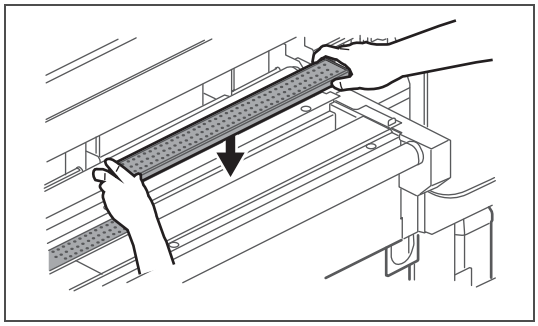

Put the ink gutter filter back in its place.

- Firmly insert the ink gutter filter frame into the gutter.

Important!

If the ink gutter filter frame is not in its place, the print head strike or print head damage may occur.

[11] Close the ink gutter cover.

- If you cannot close the cover properly, check the ink gutter filter attachment.

[12] Dispose of the waste fluid as an industrial waste product.

WARNING

You are obligated to properly dispose of waste fluid from the printer in compliance with Wastes Disposal and Public Cleansing Act and local ordinances. Delegate disposal to an industrial waste disposal contractor.

Cleaning the Take-up System

Cleaning period:

- When ink stains are visible

Preparation:

- Soft cloth

CAUTION

Unplug the power cable with the power OFF, before cleaning the Take-up System.

Steps

[1] Unload the media.

[2] Make sure that the printer and the Take-up System are turned OFF.

[3] 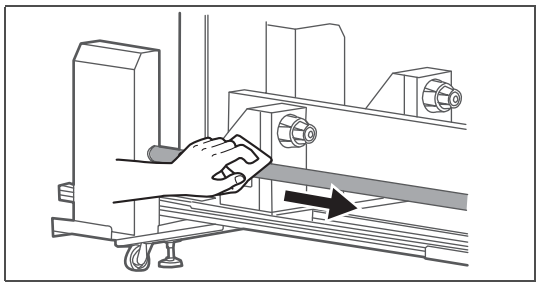

Use a wet, tightly-wrung soft cloth to clean the tension rollers of the Take-up Unit.

Replacing consumable parts

Replacing absorption material for the flushing box

The flushing box is a part that keeps receiving ink discharged from the print head. Please replace the absorption material for the flushing box periodically. If used without replacing, it can cause damage to the print head.

Replacing period:

- Approx. every 2 months (since it differs depending on usage frequency, please check periodically)

Preparation:

- Absorption material for the flushing box
- Paper you can get dirty (paper which ink will not bleed through)

1. Checking steps

[1]

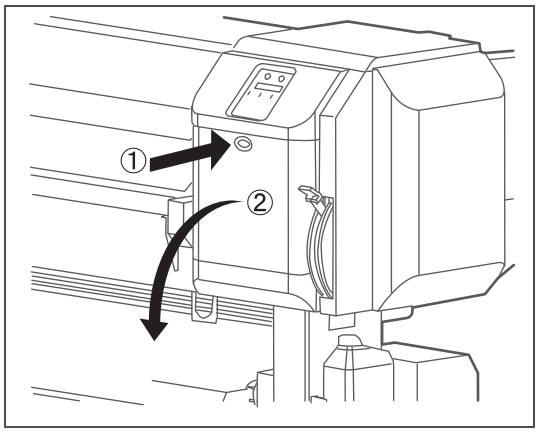

Open the maintenance cover on the right side.

[2]

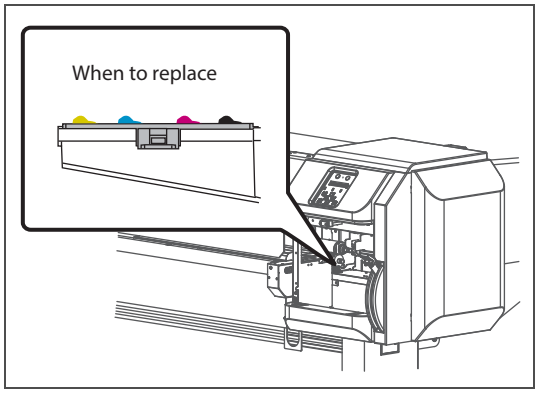

Check the absorption material for the flushing box.

- When there are lumps of ink rise from the frame of the flushing box, it is time to replace.

[3] 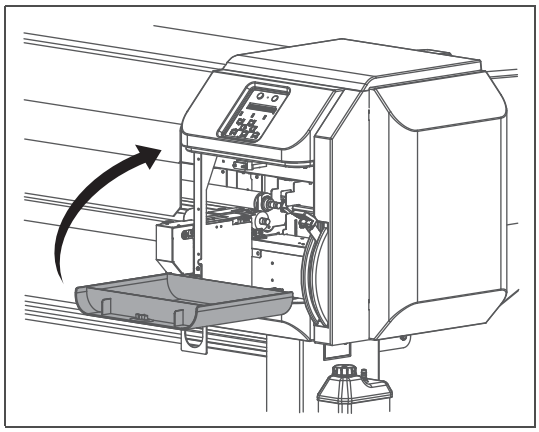

Close the maintenance cover.

2. Replacing steps

[1] Put the printer into the CR maintenance mode.

☞ **"Putting the printer into the CR maintenance mode" P. 110** under **「Cleaning of cleaning wiper」**

[2] 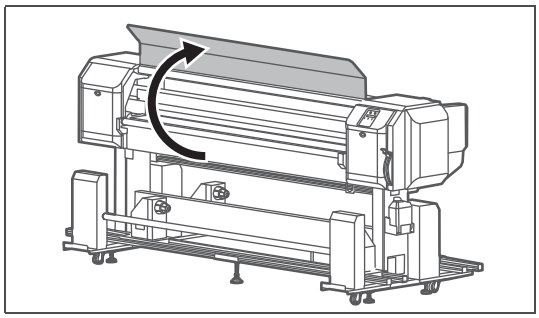

Open the front cover.

[3] Cover the platen with the paper you can get dirty.

Important!

- **Ink may drip from the absorption material for the flushing box.**
- **We recommend covering the floor with paper as well.**

[4] 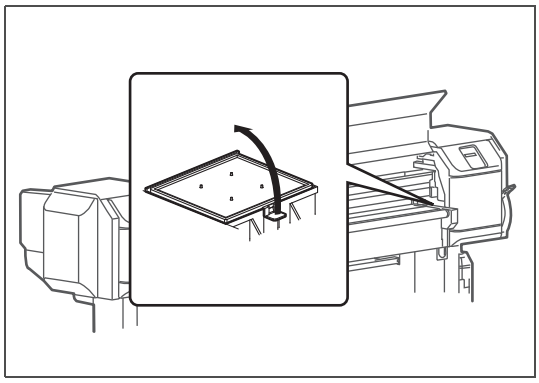

Remove the absorption material for the flushing box.

- Pull the tab up of the absorption material for the flushing box, and release the hook.

Important!

When removing the absorption material for the flushing box, be cautious of ink drops.

[5]

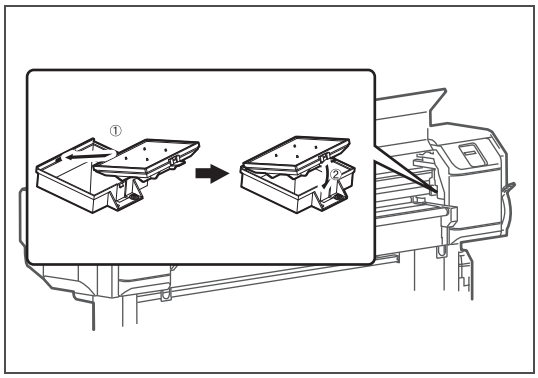

Attach new absorption material for the flushing box.

[6]

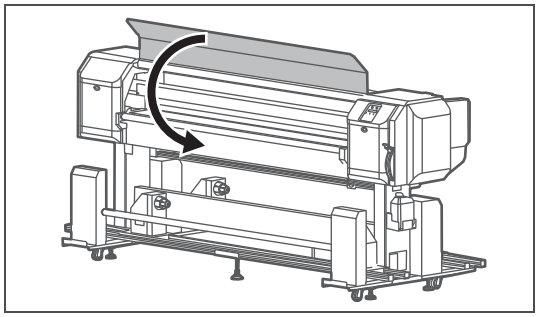

Close the front cover.

[7]

CR Maint. :	**End**

Press the [Enter] key.

CR Maint. :	**Start**

The message on the left will appear.

- That ends the procedure.

Replacing the ink gutter filter

Periodically replace the ink gutter filter.

CAUTION

Unplug the power cable with the power OFF, before replacing the ink gutter filter.

Replacing period:

- Ink gutter filter need to be replaced when ink stain cannot be removed after cleaning.

Preparation:

- Plastic gloves (commercially available)
- Ink gutter filter (supplied accessory or supplies)

Note

Ink gutter filters for replacement are bundled with the printer. Purchase the optional filter as needed.

Steps

[1] Remove the media.

[2] Make sure that the printer and the take-up system are turned OFF.

[3] Wear the plastic gloves.

[4] 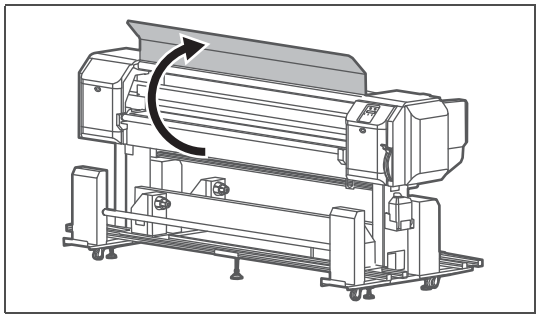

Open the front cover.

[5] 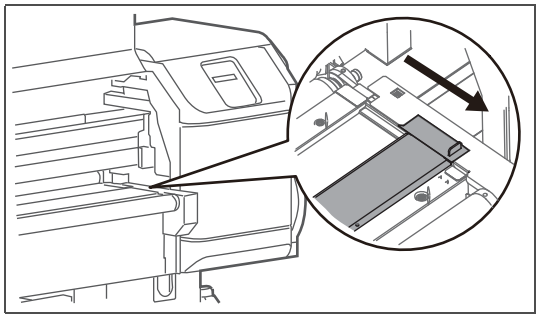

Open the ink gutter cover.

[6]

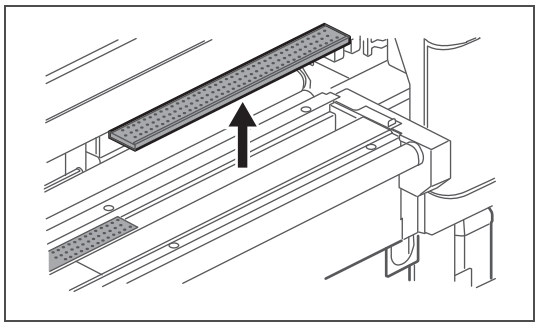

Remove the ink gutter filter and its frame (x 4).

[7]

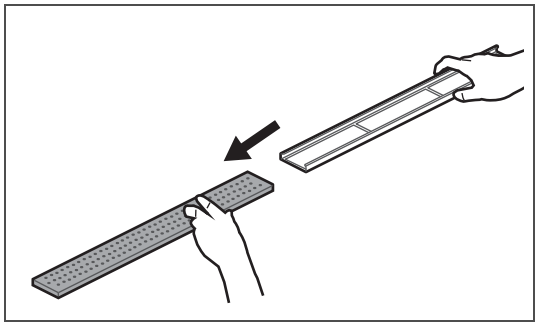

- Remove the dirty ink gutter filter from the frame.
- Attach the new ink gutter filter.

Note

Place the used ink gutter filter in a plastic bag and dispose of it in accordance with your local regulations.

[8]

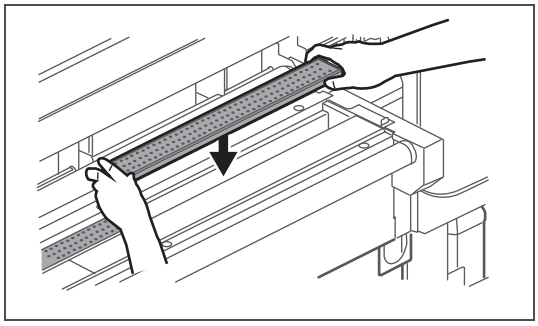

Put the ink gutter filter back in its place.

- Firmly insert the ink gutter filter frame into the gutter.

Important!

If the ink gutter filter frame is not in its place, the print head strike or print head damage may occur.

[9] Close the ink gutter cover.

- If you cannot close the cover properly, check the ink gutter filter attachment.

[10] Close the front cover.

Moving or transporting the printer

This section describes how to move or transport the printer.

Moving the printer

This section describes how to move the printer.

Important!

- **When moving the printer, make sure to maintain a horizontal position.**
- **Do not tilt, set against something or place this product upside down.**
  Otherwise the ink may leak or the handling mentioned above may cause abnormality.

1. Preparation before moving

[1] Make sure that the printer is turned OFF.

[2] Dispose of waste fluid.

[3] Remove all the cables, such as Power cord set.

[4] 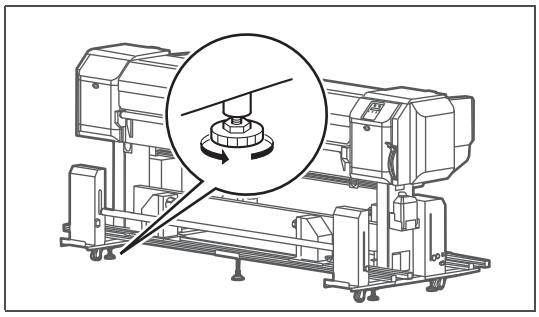

Loosen the four adjusters of Stand as shown in the left.

[5] Move the printer.

2. Reinstalling

[1] Select a suitable place for installation.

☞Startup Guide

[2] Move and install the printer to the location.

[3] Attach Cables, such as Power cord set.

[4] Perform Nozzle check, and then confirm that there is no clogging in Print head.

☞ **"Nozzle check steps" P. 50**

[5] Perform print quality adjustment.

☞ **"Print quality adjustment steps" P. 55**

Transporting the printer

When transporting the printer, make sure to pack it in the same condition as purchased, using protective and packing materials to protect the printer from vibration and shocks.

Important!

When transporting the printer, consult the MUTOH product dealer at your point of purchase.

Long-term storage

If not using the printer for a long time, execute [Longstore].

Preparation:

- Cleaning cartridge: 8 cartridges

[1] Empty the waste fluid tank.

"Emptying waste fluid tank" P. 107

[2]

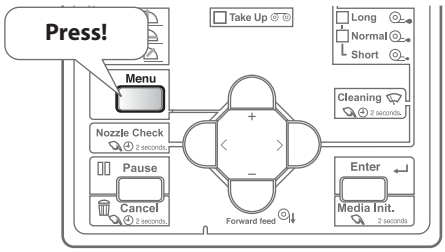

Press the [Menu] key.

[3]

Menu 1 :	**Setup >**

Press the [>] key.

[4]

Set 16 :	**Longstore**

Press the [-] key several times, to bring up the display on the left.
Press the [Enter] key.

[5]

Longstore :	**Start**

Press the [Enter] key.

Remove Cartridges

The message to the left is displayed.

[6]

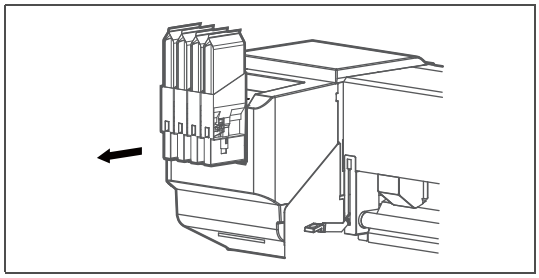

Remove all high-capacity ink pack adapters.

Busy-Washing

The message on the left will appear.

- Ink discharging begins.

Insert CleaningCart.

When the discharge is complete, the message to the left is displayed.

[7]

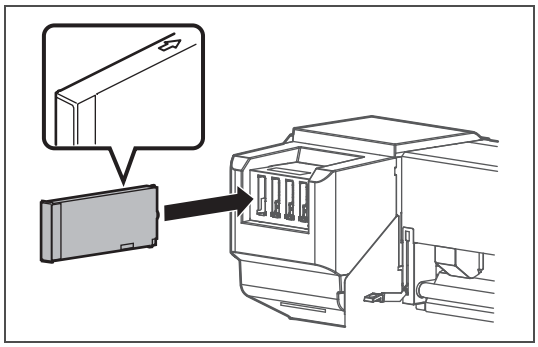

Install the cleaning cartridges to all of the ink cartridge slots.

- The arrow should face up.
- Insert all the way to the end.

Busy-Washing

The message on the left will appear.

- Charging of the cleaning fluid begins.

Remove Cartridges

When charging of the cleaning fluid is complete, the message to the left is displayed.

[8]

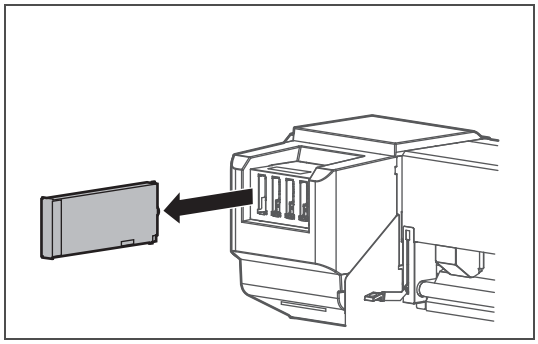

Remove all cleaning cartridges.

Busy-Washing

The message on the left will appear.

- Discharging of cleaning fluid begins.

Insert CleaningCart.

When cleaning fluid discharging ends, the message on the left will appear.

[9]

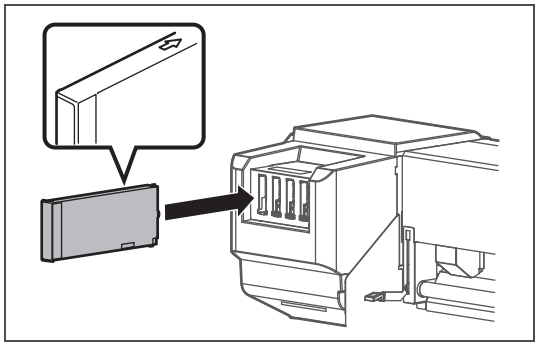

Insert cleaning cartridges into all the cartridge slots.

- The arrow should face up.
- Insert all the way to the end.

Busy-Washing

The message on the left will appear.

- Start charging cleaning fluid.

Remove Cartridges

When cleaning fluid charging ends, the message on the left will appear.

[10]

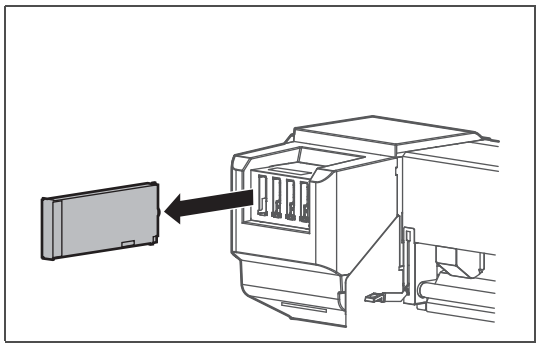

Remove all cleaning cartridges.

Busy-Washing

The message on the left will appear.

- Discharging of cleaning fluid begins.

[ALL]	**No Cartridge**

When discharging is complete, the message to the left is displayed.

[11] Turn the power OFF.

Performing initial charging after head cleaning

[1]

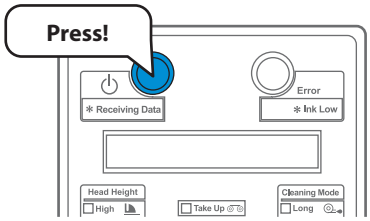

Turn the printer ON.

- Blue light becomes ON.
- The product starts initialization operations.

[2]

Start Ink Charge -> Enter

When the message to the left is displayed, press the [Enter] key.

[3]

Wash retry? No

Press the “Enter” key when the message on the left appears.

Insert InkCartridges

The message on the left will appear.

Note

If you need to perform a head cleaning and “Wash retry? No” is displayed, press the [-] key to change the display to “Wash retry? Yes” and press the [Enter] key. After that, follow the instructions displayed on the operation panel. When cleaning is complete, “Insert InkCartridges” is displayed. Proceed to step 4 in this section.

[4]

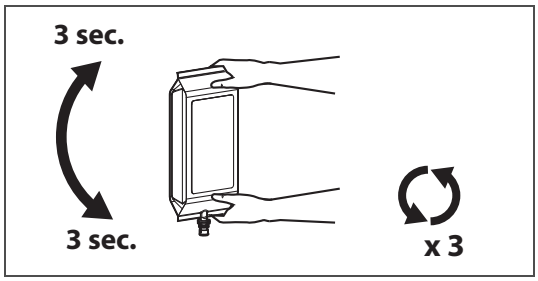

Make sure you shake the ink cartridge after you unpack it.

- Turn the ink plug upward and wait for three seconds.
- Next, turn the ink plug downward and wait for three seconds.
- Repeat that three times.

[5]

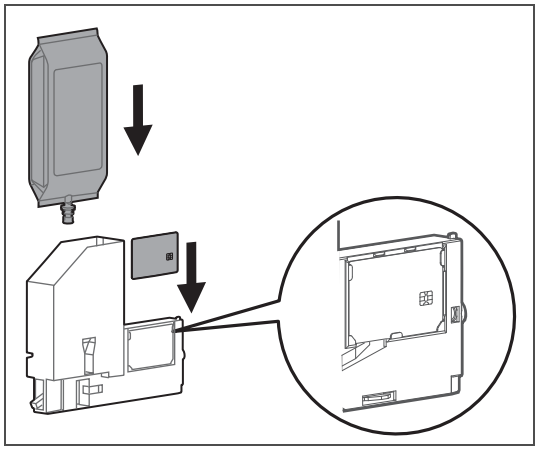

Install the ink bag and smart chip in the high-capacity ink pack adapter.

"Installing the ink bag and smart chip card" P. 105

[6]

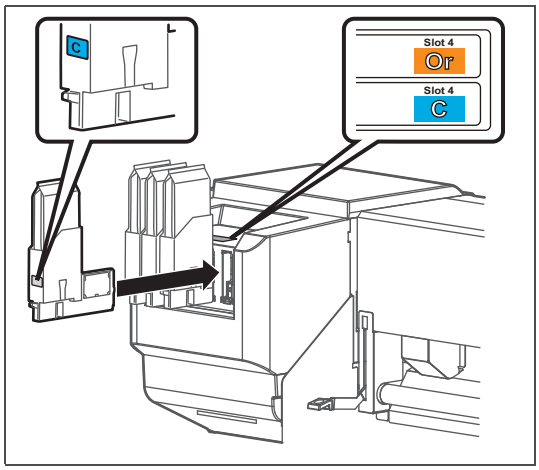

Insert high-capacity ink pack adapters.

- Match the label of this product to the color label of high-capacity ink pack adapters.
- Insert all the way to the end.

Ink Refill **%**

The message on the left will appear.

- Ink charging begins.

CAUTION

During ink charging, make sure:

- **Not to turn OFF the printer.**
- **Not to unplug the power cable of the printer.**
- **Not to open the front cover.**
- **Not to open the maintenance cover.**
- **Not to raise the media setting lever.**

Media End

When ink charging is complete, the message to the left is displayed.

Important!

If the printer perform the nozzle check printing immediately after the initial ink charge is complete, the following results may occur.

- **Printed lines become blurred.**
- **The data is partially not printed.**

In such cases, follow **"Cleaning steps" P. 51** **and perform "Little Charge". Then, check the print result.**

If there is no improvement in the print result even after performing "Little Charge", leave the printer unused for an hour or more. Then perform "Little Charge" again and check the print result.

If there is still no improvement, contact your local Mutoh dealer.

Chapter 4 Appendix

Messages and Error Messages 136

Status messages 136
Error message display and remedies 138
Error requiring restart 140

Troubleshooting 141

Installation and initial setup troubleshooting 141
Boot-up troubleshooting 142
Media-related troubleshooting 143
Take-up System-related troubleshooting 144
Printing-related troubleshooting 146

Specifications of this product 149

Drawing area 149
List of specifications 150

Options / Supply list 153

Revision History 153

Messages and Error Messages

This section describes messages displayed during normal printer operation or when errors occur, and solutions to the messages.

Status messages

This section describes messages displayed during printer normal operation.
When the product is operating correctly, each operation status is displayed on the operation panel as below.

Display	Description
Init. Media=Enter 2s	Media initialization is not complete (Media is loaded). Press and hold the [Enter] key to 2 seconds or longer to execute media initialization.
Ready to Print	Standby (Media is loaded).
Media End	Standby (Media is not loaded). ☞ **"Loading the media" P. 38**
Receiving	Receiving data.
Converting	Analyzing data.
Printing	Under printing.
Remain: XXX.Xm	Displays the length of the data that has not been printed in meters for the data currently being printed.
Remain Time: XXX.Xmin	Displays the time remaining to print in minutes for the data currently being printed.
Media Remain: XXX m	Displays the remaining length of the roll media currently set in meters.
PrintRestart -> Enter	Pausing printing. Press the [Enter] key to restart printing.
SubTank Refill	Filling the subtank. Please wait a while.
User: Type ** OK?	Initializing the media. Please wait a while. (** represents the set User type.)
Media Initial	
Life Times [Pump]	The operational life of the pump motor has almost expired. (Continues operation) Contact your local MUTOH dealer.
Life Times [CR Motor]	The operation life CR motor has almost expired. (Continues operation) Contact your local MUTOH dealer.
Life Times [PF Motor]	The operational life of the PF motor has almost expired. (Continues operation) Contact your local MUTOH dealer.
Power Off	Turning OFF the printer.Wait for a while.
[*] Change Plug	Connector rubber for High-capacity ink pack adapter is at the end of its life. Replace Connector rubber of High-capacity ink pack adapter. ☞ Operation manual for High-Capacity Ink Pack Adapter
S/C Reading	Reading the S/C card.

Display	Description
*** Remote Mode ***	The remote panel mode is running, via MSM or similar. In the remote panel mode, operations via the operation panel are not possible. To terminate the remote panel mode, press the [Cancel] key for more than two seconds.
Insert CleaningCart.	Washing Print head. Install the cleaning cartridges.
Busy-Washing	• Initial filling, ejecting filler fluid. • Washing the print head by cleaning fluid. Please wait a while.
Remove Cartridges	Washing Print head or discharging ink. Remove the cartridges.
Insert Ink Cartridges	Filling the ink. Insert Ink Cartridges
Ink Refill **%	Filling the ink. Please wait a while.

Error message display and remedies

This section describes error messages and remedies.
Error messages are displayed when certain failures occur during printer operation.
If an error that can be displayed occurs, the printer may display the following error messages on the operation panel and stop operation.

Display	Description
Cover Open	Front cover is open. Close Front cover.
Mainte. CoverL Open	Left Maintenance cover is open. Close Maintenance cover.
Mainte. CoverR Open	Right Maintenance cover is open. Close Maintenance cover.
Lever Up	Media loading lever is raised. Lower Media loading lever.
	The media is not loaded. Load the media. ☞ **"Loading the media" P. 38**
Undefined Media	Media detection has failed. (Stops operation) Reload the media.
Media Slant	Media is fed obliquely. (Stops operation) Reload the media.
End Of Media	The Media has run out. (Stops operation) Load a new media. ☞ **"Loading the media" P. 38**
Media End / Takeup Err	The Take-up system switch is off. (Stops operation) Set the Take-up system switch to outside roll or inside roll.
Open Gutter Cover	Ink gutter cover is open. Close Ink gutter cover.
Heater Error	Your heater may be malfunctioning. (Stops operation) Check the heater.
[******] Ink End	Ink has run out. (Stops operation) Replace with a new ink cartridge. ☞ **"Replacing ink" P. 104**
[******] NoCartridge	Ink cartridge is not inserted. (Stops operation) Insert Ink cartridge.
[*******] Discharged	Ink is not filled. Perform initial ink filling. ☞ **"Performing initial charging after head cleaning" P. 133**
Full WasteInkTank	The waste fluid tank has become full. (Operation will stop when this happens.) Immediately transfer the waste ink into a container. ☞ **"Emptying waste fluid tank" P. 107**
[*] Ink Low	Slot * ink is low. Get a replacement cartridge ready.

Display	Description
[******] S/C ReadErr	Reading S/C Card has been failed. Insert ink cartridge again. If S/C Card still cannot be read, insert new ink cartridge.
[******] S/C Col.Err	Ink cartridges are inserted in wrong slots. Insert ink cartridges correctly again.
[*] S/C Ink Err	The ink cartridge cannot be used for this printer. Contact your local MUTOH dealer.
[*] S/C CodeErr	Inserted ink cartridge is not a proper one. Contact your local MUTOH dealer.
[*] Broken Chip	S/C Card has been broken.Insert new ink cartridge.
[******] Check Ink	Ink cartridges were not recognized correctly. Insert ink cartridges correctly again. Contact your local MUTOH dealer.

Note

- [*******] in the error message indicates the target ink cartridge slot.
- If no ink and no cartridge occur at the same time, no cartridge message has priority to be displayed.

Error requiring restart

An error requiring restart is displayed if a fatal operational failure such as the following occurs.

- When an obstacle that prevents printing occurs.
- When a problem occurs with the electrical circuit (PCB, motor, sensor, etc.) of the printer.
- When a failure in the printer control program occurs.

If an error requiring restart occurs, the printer stops operating after performing the following operations.

1. The drive power automatically shuts down.
2. All lamps on the operation panel blink, and the buzzer rings continuously.
3. The error message is displayed on the operation panel.

Pressing any key on the operation panel stops the beeping.
For an error requiring restart, operation will return to normal after removing the cause of the error and restarting the printer.
If the same error continues to be displayed, contact the your local MUTOH dealer.
Be sure to tell us the code no. of the error message when you contact us.

Display	Description
E***Err [ ]	A problem that does not have a remedy has occurred. 1. Remove obstacles such as paper scraps in the drive system. 2. Confirm that the replaced items are correctly attached. 3. Turn the power button off. Wait a short while, then turn the power button on, to restart the printer.

Note

- "***" in the error message is the code no. that indicates what type of error occurred.
- The command code representing the error occurred may be indicated in [ ].

Troubleshooting

This section describes undisplayed malfunctions and failures of the printer, possible causes and countermeasures.

Note

- The current status and error information of your printer can be checked from the Printer Status tab > Status Information on MSM.
  If your printer is not operating correctly, check this Status Information first.
- Make sure to use the latest version of MSM.
  To check the latest available version, go to Help > Version > Check for updates on MSM.
  If old version is installed in your computer, download the latest version from MUTOH Club.
  MUTOH Status Monitor Operation Manual

Installation and initial setup troubleshooting

Cannot perform the initial ink charging.	Is the front cover, or the maintenance cover open? - Close the front cover, or the maintenance cover.
	Is the media setting lever raised? - Lower the media setting lever.
	Are High capacity ink pack adapters inserted all the way into the printer? - Make sure High capacity ink pack adapters are all inserted properly.
Ink does not come out after ink charging.	Is the ink bag too cold? - Leave the ink bag at room temperature for at least 3 hours, and perform cleaning several times.
	Is the power turned OFF during ink charging? -Turn the power ON again and continue ink charging.
Nozzle missing occurs after initial ink charging.	Did you perform head cleaning? - Perform cleaning, then, check the print result. - If there is no improvement in the print result even after performing cleaning, leave the printer unused for an hour or more. Then perform cleaning or "Little Charge" again and check the print result. - If there is still no improvement, contact your local Mutoh dealer.

"Head cleaning" P. 108

MSM or RIP cannot access to the printer.	Is Ethernet cable connected correctly? - Securely connect the Ethernet cable to the Ethernet Port.
	Are the network settings configured correctly? - Configure the network settings correctly.
	Do the printer's network settings match the computer's settings? - Match this product's network settings with the computer side environment.

☞ "Set 20: IP Address" P. 87, "Set 21: Subnet Mask" P. 87, "Set 22: Gateway" P. 87

Boot-up troubleshooting

Does not work at all after power activation / after loading the media.	Is the power cable connected to the plug? - Connect the power cable.
	Does the AC power supply provide the specified voltage? - Connect the cable to another outlet.
	Is the front cover, or the maintenance cover open? - Close the front cover, or the maintenance cover.
	Is the media setting lever raised? - Lower the media setting lever.
	Is there any error message displayed on MSM? - Go to the Printer Status tab in MSM and check that if any error message is displayed in the Status Information.
	Is the ink gutter cover closed? - Open the ink gutter cover after loading the media.
	Do you use the printer within recommended environmental conditions? - Make sure to use the printer within the specification range.

☞ "Loading the media" P. 38,

Media-related troubleshooting

The media slips, is torn / crumpled during initialization.	Is the media loaded correctly? - Load the media correctly.
	Do you use the printer within recommended environmental conditions? - Make sure to use the printer within the specification range.
	Are any curls or warps present on your media? - Set the media holder at both edges of the media. - Adjust the tension unit weight.
	Are you using creased, damaged, torn or curled media? - Replace the media.

The printer does not detect the media.	Is the media loaded correctly? - Load the media correctly.
	Is the media loaded at an angle? - Load the media straight.
	Do you use the printer within recommended environmental conditions? - Make sure to use the printer within the specification range.
	Did you load the media which has been printed before? - Use a new media.

☞ **"Loading the media" P. 38**, **"Adjusting the Weight" P. 31**,

Take-up System-related troubleshooting

The Take-up System does not work.	Is the power cable connected to the plug? - Connect the power cable.
	Is the AUTO switch of Take-up System set to either OUTSIDE ROLL or INSIDE ROLL? - Set the AUTO switch according to the media rolling direction.
	Is the “Set 6: Output Mode” set to “Off”? - Select “Take Up” when using the Take-up System.
	Did you select "SLACK" on the OPERATION switch of Take-up System for inside roll media? - The “SLACK” setting on this product doesn’t support inside roll media. For the inside roll media, use the Tension take-up method.
	Does the red lamp of the Take-up System light up? - Set the AUTO switch on the side where the red lamp has lit up to “OFF”. Set the AUTO switch according to the media rolling direction.
	Is “Media End/Take-up Error” displayed on the operation panel? - Raise and lower Media setting lever. “Init. Media=Enter 2s” is displayed on the operation panel. - Press and hold the [Enter] key to 2 seconds or longer to detect the media. “User: Type** OK?” is displayed on the operation panel. - Press the [Enter] key on the operation panel.

Take-up System does not correctly feed or wind roll media.	Is the AUTO switch of Take-up System set to either OUTSIDE ROLL or INSIDE ROLL? - Set the AUTO switch according to the media rolling direction.
	Is the media loaded correctly? - Load the media correctly.
	Did you install the front rail and the rear rail of Take-up System parallel to the printer? - Install both rails to be parallel to the printer.
	Does the slack detection sensor light up green and orange when using Slack take-up method? - Adjust the angle of the slack detection sensor.

The printed media is wound on the Take-up System with wrinkles.	Is the media loaded correctly? - Load the media correctly.
	Did you install the front rail and the rear rail of Take-up System parallel to the printer? - Install both rails to be parallel to the printer.

☞ **"Take-up System" P. 27**, **"Set 6: Output Mode" P. 80**, **"Loading the media" P. 38**, **"Adjusting the Rail" P. 33**, **"Adjusting the Slack Detection Sensor" P. 35**

Printing-related troubleshooting

The printer does not print.	Is Ethernet cable connected correctly? - Securely connect the Ethernet cable to the Ethernet Port.
	Is there any error message displayed on MSM? - Go to the Printer Status tab in MSM and check that if any error message is displayed in the Status Information.
Smears or missing area partially appears on the prints.	Are any curls or warps present on your media? - Set the media holder at both edges of the media. - Adjust the tension unit weight.
	Does the media contain moisture or are you using the creased or wrinkled media? - Replace it with the new media.
The printing position is incorrect (some parts of the media cannot be printed on).	Is the media loaded correctly? - Load the media correctly.
	Did you set up the origin? - Cancel or reset the settings of the origin.
Printing is blurred.	Is the media printed on the printing surface? - Check the printing surface of the media and set it correctly.
	Did you perform Print quality adjustment? - Perform Print quality adjustment.
	Did you perform Media feed adjustment? - Perform Media feed adjustment.

☞ **"Adjusting the Weight" P. 31**, **"Loading the media" P. 38**, **"Set 7: Origin" P. 81**, **"Print quality adjustment steps" P. 55**, **"Media feed adjustment steps" P. 56**

White or black lines appear on printed media.	Is the media loaded correctly? - Load the media correctly.
	Does the media contain moisture or are you using the creased or wrinkled media? - Replace it with the new media.
	Are Nozzles in good condition? - Perform Nozzle check. Then if nozzle missing is found, conduct cleaning.
	Did you perform Print quality adjustment? - Perform Print quality adjustment.
	Did you perform Media feed adjustment? - Perform Media feed adjustment.
Printing lines are not straight / are duplicated or patchy.	Are Nozzles in good condition? - Perform Nozzle check. Then if nozzle missing is found, conduct cleaning.
	Did you perform Print quality adjustment? - Perform Print quality adjustment.
	Did you perform Media feed adjustment? - Perform Media feed adjustment.
	Is Ink bag within the validity period? - Use a non-expired ink bag.
Printed color is not accurate.	Are Nozzles in good condition? - Perform Nozzle check. Then if nozzle missing is found, conduct cleaning.
	Did you install an ink bag on each high-capacity ink pack adapter with correct ink color of S/C card? - Check that the ink color written on S/C card matches the ink color of ink bag installed on each high-capacity ink pack adapter. - If it does not match, perform "Longstore" to clean the print head and then perform initial ink charging.

☞ **"Loading the media" P. 38**, **"Nozzle check and cleaning" P. 50**, **"Print quality adjustment steps" P. 55**, **"Media feed adjustment steps" P. 56**

Nozzle missing remains after head cleaning.	Is there any ink stains or deposits on the cleaning wiper or circumference of the print head? - Clean the cleaning wiper and circumference of the print head.
	Did you select an appropriate cleaning setting? - If nozzle missing still persists after attempting Normal Cleaning or Long Cleaning two or three times, perform “Little Charge”.

☞ "Cleaning of cleaning wiper" P. 110, "Cleaning of print head circumference" P. 113, "Head cleaning" P. 108

Drawing area

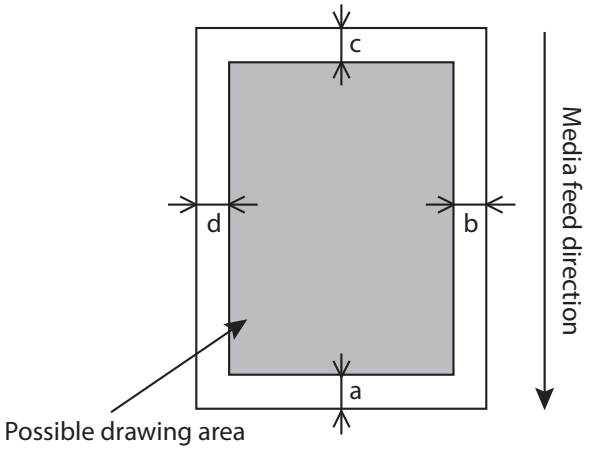

a=5mm *1*2
b=5mm *3
c=5mm
d=5mm *3

*1 After media initial, printing starts at 15 mm.

*2 While the media initial tip is ON, printing starts at 40 mm.

*3 According to the remote panel settings

List of specifications

Model Name		VJ-1938TX
Print method		On demand piezo method
Drive method		Firmware servo/DC motor drive
Media feed method		Grid roller system
Media fixing system		Pressurization roller down system by manual lever
Conditions of usable media	Maximum width	1,910 mm
	Minimum width	900 mm
	Maximum thickness	1.3 mm (when the head height is Low) 2.3 mm (when the head height is Mid) 3.5 mm (when the head height is High)
	Weight	100 kg or less
Maximum print width		1,900 mm
Maximum print length		200 m
Head height adjustment		Three-level adjustment of Low, Mid, and High
CPU		64bit RISC CPU
Memory		384 MB
Interface		Ethernet(10/100BASE-TX, 1000BASE-T)
Ink	Color	4-color (Black, Cyan, Magenta, Yellow) 7-color (Black, Cyan, Magenta, Yellow, Orange, Green, Blue)
	Type	1,000 ml ink bag
Waste fluid tank		Fixed to the body type, capacity 2,000 ml, waste ink discharge by users
Environmental conditions	Printer Operation Environment	Temperature 20 to 32 °C, humidity 40 to 60% No condensation
	Recommended Printing Environment	Temperature 22 to 30 °C, humidity 40 to 60% No condensation
	Change rate	Temperature: No more than 2 °C per 1 hour Humidity: No more than 5% per 1 hour
	Printer Storage Environment	• Storage without ink charging: up to 6 months Temperature: -20 to +60 °C, humidity: 20 to 80% No condensation • Storage with ink charging: Temperature: 5 to 30 °C, humidity: 20 to 60% No condensation

	Ink Storage Environment	Black, Cyan, Magenta, Yellow, Orange, Green, Blue (1,000 ml each) • Temperature: 5 to 35 °C • Humidity: No condensation Cleaning fluid • Temperature: 5 to 35 °C • Humidity: No condensation
Power supply specifications	Voltage	AC 100V to 240V ±10%
	Frequency	50/ 60Hz ±1Hz
	Capacity	No less than 2.5 A
Power consumption	Power off	AC100V to 240V, 1.2 W or below
	Standby	60.0 W
	Sleep Mode	21.0 W
	Operation	360.0 W or below
Current consumption	100V to 240V	2.5 A or below
External dimensions	Height	1,261 mm (Size of printer when the front cover is opened: 1,529 mm)
	Width	2,983 mm
	Depth	1,134 mm
Weight	Main body	177 kg
	Stand	37 kg
	Take-up System	135 kg

Take-up System

Drive method		DC Geared Motor Drive
Condions of usable media	Maximum width	1,910 mm
	Minimum width	900 mm
	Outside diameter of the roll media	Less than Φ250 mm
	Media Core Dimension	50.8 mm (2 inch), 76.2 mm (3 inch)
	Supported Media Core Width	2,000 mm
	Roll media weight	100 kg or less
Feeding/ Winding Direction	Feeding Unit	Outside roll, Inside roll
	Take-up Unit	Outside roll, Inside roll (“Outside roll” only when “slack”)
Power supply specifications	Voltage	AC 100V to 240V ±10%
	Frequency	50/ 60Hz ±1Hz
	Capacity	No less than 1.0 A
Power consumption	Power off	1.0 W or below
	Standby	18.0 W or below
	Operation	80.0 W or below
Current consumption	100V to 240V	1.0 A or below
Environmental conditions	Operation Environment	Temperature: 20 to 32 °C, humidity: 40 to 60% No condensation
	Recommended Environment	Temperature: 22 to 30 °C, humidity: 40 to 60% No condensation
	Change rate	Temperature: No more than 2 °C per 1 hour Humidity: No more than 5% per 1 hour

Options / Supply list

For more information about the options and the supply items, contact your local MUTOH dealer.

Revision History

Date	Version	Manual code	Supported Firmware
2016.1	00	VJ1938TXE-A-00	V.1.00
2016.6	01	VJ1938TXE-A-01	V.1.01
2016.8	02	VJ1938TXE-A-02	V.1.01
2017.6	03	VJ1938TXE-A-03	V.1.01
2018.10	04	VJ1938TXE-A-04	V.1.01
2020.1	05	VJ1938TXE-A-05	V.1.01
2020.3	06	VJ1938TXE-A-06	V.1.03 or later

MUTOH

VJ1938TXE-A-06